INVITATION TO BID

Pump Station 12 - Upgrades

ITB Number: 2018-19-9500-00-012

ADDITIONAL INFORMATION & CLARIFICATION DEADLINE
Thursday, March 14, 2019
RESPONSE SUBMISSION DATE AND TIME
Tuesday, April 2, 2019

AT

CITY OF HIALEAH
OFFICE OF THE CITY CLERK
CITY HALL, 3RD FLOOR
501 PALM AVENUE
HIALEAH, FL 33010 – 4719

Each Bidder is solely responsible for ensuring that it submits its response to this Invitation to Bid at the Office of the City Clerk on or before the applicable deadline. The City of Hialeah will not be responsible for delays caused by the United States Postal Service or any other occurrence.

Copies of this ITB Document may be obtained by contacting Luis A. Suarez, the Acting Purchasing Manager of the Purchasing Department, at **lasuarez@hialeahfl.gov**

The City of Hialeah, Florida (hereinafter referred to as the "City"), is hereby soliciting Bids from all qualified companies to provide services associated with the Pump Station 12 - Upgrades. Any qualified company ("Person") wishing to submit a Bid shall comply with the requirements contained in this Invitation to Bid ("ITB" or "Solicitation") for Pump Station 12 - Upgrades (ITB Number: 2018-19-9500-00-012).

The objective of this ITB is to secure the services of an experienced and reliable contractor that is capable of upgrading one submersible wastewater pump station including, but not limited to, demolition of existing facilities including pumps, piping, electrical equipment, instrumentation, and structures; furnishing, installation, and maintenance of required temporary utilities, including bypass pumping; furnishing and installation of pumps and motors, panels, piping, valves, other appurtenances; construction of structures, including slabs and vaults; refurbishment of existing wet well; site restoration and improvements, including pavement, fencing, and lighting; testing and start-up services; and all other appurtenant miscellaneous items and work required for a complete project.

Each Bid shall be submitted in two (2) separate sealed envelopes; one (1) envelope shall contain the "Qualifications Package" and the second envelope shall contain the "Cost Package". The outside of each sealed envelope must clearly indicate the name and number of this ITB (Pump Station 12 – Upgrades; ITB Number: 2018-19-9500-00-012); the Bidder's name and address; and the name and telephone number of the Bidder's contact person. Each envelope shall be marked as either the "Qualifications Package" or the "Cost Package."

Each Bid must be delivered to the City Clerk no later than the date and time specified below as the "Deadline for Submittal of Bids." Bids received after said date and time will not be considered. No time extensions will be granted. Each Bid must be delivered to the City of Hialeah, Office of the City Clerk, Hialeah City Hall, 3rd floor, 501 Palm Avenue, Hialeah, FL 33010.

The City's schedule for this Solicitation is as follows:

Event	Date	Time
Advertisement Date:	Monday, February 25, 2019	
Last Date for Receipt of Written Questions:	Thursday, March 14, 2019	2:00 PM
Deadline for Submittal of Bids:	Tuesday, April 2, 2019	10:30 AM
Evaluation of Responses:	TBD	
City Council Contract Approval Date:	TBD	

(The City reserves the right to delay or modify scheduled dates and will notify Bidders of all changes in scheduled dates.)

Bid documents, including drawings, technical specifications and proposal forms may be obtained for free via digital download from www.hialeahfl.gov Purchasing Department – Bids & RFP's, physical copiers may be obtained at City Hall, 501 Palm Avenue, 4th Floor, Hialeah, Florida. A $50.00, non-refundable fee is required per set, payable to the City of Hialeah, via a company check only.

Bid bond will be required. A bid bond in the amount of 5% of the bid price will be required. In the alternative, you may submit a certified check or bank draft payable to the City of Hialeah in an equivalent amount. Should the contractor fail to submit the bid bond, the bid will automatically be rejected.

Performance and Payment Bonds will be required if the contract amount exceeds $ 200,000.00. This bond is only required if the contractor is awarded the bid. It does not need to be submitted with the bid proposal. It must be submitted within 10 days of bid awarded, for the full amount of the contract in strict accordance with § 255.05, Fla. Stat. Failing to do so, bidder will forfeit bidder's bid bond.

ACCEPTANCE AND REJECTION OF BIDS

Each Bidder should carefully review the entire text of the City's Solicitation. The Solicitation describes the City's rights and the Bidder's obligations under this Solicitation. Among other things, the City reserves its right to: reject any or all Bids, with or without cause; waive minor irregularities with regard to the Bid requirements and the Bids received; and award the City's work to a Bidder that is responsive, responsible, and provides the best overall value to the City, as determined by the City in its discretion. By submitting a Bid in response to this Solicitation, a Bidder acknowledges that it accepts all of the terms, conditions, and limitations imposed on the Bidder by this Solicitation.

A Bid may be withdrawn prior to the deadline for submitting Bids to the City under this ITB. Any Bid that is not withdrawn in time shall constitute an irrevocable offer to provide the services requested herein. The offer shall remain in effect for the period of one hundred eighty (180) days after the deadline for submitting the Bid.

Please be advised that this Solicitation is issued subject to the City of Hialeah's Code of Ordinances. Communications with the Mayor, City Council, and City Staff are restricted.

We look forward to your active participation in this Solicitation.

Sincerely,

Luis A. Suarez

Luis A. Suarez
Acting Purchasing Manager

TABLE OF CONTENTS
CITY OF HIALEAH
PS 12 UPGRADES
BID SET

TECHNICAL SPECIFICATIONS

Section 1 Bid Price Form
Section 2 Bid Submittal Instructions & Format
Section 3 Guidelines and General Information
Section 4 General Condition
Section 5 Special Conditions
Section 6 Forms and Appendixes

Appendix A - Bid Submittal Form
Appendix B - Submittal Checklist

DIVISION 1 - GENERAL REQUIREMENTS

01010 Summary of Work
01025 Measurement and Payment
01040 Coordination
01070 Abbreviations
01090 Reference Standards
01200 Project Meetings
01300 Submittals
01380 Construction Photographs
01400 Quality Control
01510 Temporary Utilities
01530 Protection of Existing Facilities
01550 Site Access and Storage
01560 Temporary Environmental Controls
01600 Materials and Equipment
01660 Equipment Testing and Start-up
01700 Project Closeout

DIVISION 2 – SITEWORK

02050 Demolition
02141 Temporary Bypass Pumping
02222 Excavation and Backfill for Utilities
02224 Excavation and Backfill for Structures
02510 Asphaltic Concrete Pavement
02526 Concrete Pavement, Curb and Walkways

DIVISION 3 – CONCRETE

03100 Concrete Formwork
03200 Concrete Reinforcement
03300 Cast-in-Place Concrete
03315 Grout
03350 Concrete Finishes
03400 Precast Concrete

DIVISION 4 – MASONRY – NOT USED

DIVISION 5 – METALS

05531 Aluminum Access Hatches

DIVISION 6 – WOODS AND PLASTICS – NOT USED

DIVISION 7 – THERMAL AND MOISTURE PROTECTION

07920 Sealants and Caulking

DIVISION 8 – DOORS AND WINDOWS – NOT USED

DIVISION 9 – FINISHES

09850 Painting
09900 Specialty Coatings

DIVISION 10 – SPECIALTIES – NOT USED

DIVISION 11 – EQUIPMENT

11000 Equipment General Provisions
11190 Pumps - General
11192 Submersible Non-Clog Pumps

DIVISION 12 – FURNISHINGS – NOT USED

DIVISION 13 – SPECIAL CONSTRUCTION

13252 Odor Control System

DIVISION 14 – CONVEYING SYSTEMS – NOT USED

DIVISION 15 - MECHANICAL

15000 Piping, General
15006 Ductile Iron Pipe
15020 Pipe Supports
15100 Valves - General
15105 Check Valves
15109 Plug Valves
15114 Miscellaneous Valves and Appurtenances
15995 Pipeline Testing

DIVISION 16 – ELECTRICAL

16050 Electrical General Provisions
16110 Raceways
16120 Wires and Cables
16195 Electrical Identification
16440 Disconnect Switches
16482 Reduced Voltage Solid State Starter

DIVISION 17 – INSTRUMENTATION

17530 Level Control Panel (LCP)
17560 Transient Voltage Surge Suppression Devices
17600 Unpowered Instruments - General
17650 Pressure Gauges
17700 Powered Instruments, General
17701 Magnetic Flow Meters
17761 Pressure Transmitter

END OF TOC

Section 1

Bid Price Form

BID PRICE FORM
CITY OF HIALEAH
PUMP STATION 12 UPGRADES

Item No.	Quantity	Description	Total
1	Aggregate Sum	For performing **mobilization, site preparation and demolition** work as needed for modifications to **Pump Station No. 12** including all labor, equipment, and materials required as well as obtaining and paying for all bonds, permits, and insurance, the aggregate sum amount of: _____Dollars and _____Cents	$_____
2	Aggregate Sum	For all costs incurred in **furnishing, delivering and installing all materials, equipment, supplies, and start up services** for modifications to **Pump Station No. 12** complete, including but not limited to Trench Safety Act, sheeting and shoring, mechanical, electrical, and structural work, other miscellaneous costs, overhead and profit, performing and coordinating start-up services including performance tests for the pumps, electrical control panel, level sensors devices, and telemetry system, for a complete functional installation the aggregate sum of: _____Dollars and _____Cents	$_____

_____ _____
Name of Bidder Signature of Bidder

Item No.	Quantity	Description	Total
3	Aggregate Sum	For all costs to furnish, install, operate (manned 24 hours per day, seven days a week) and maintain a **by-pass system** during the process of upgrading **Pump Station No. 12**, which includes personnel, equipment installation, 48 hour performance test period prior to pump station demolition, full station bypass during station upgrades, and system remains on site for 7 days after the start-up of lift station is complete to ensure that lift station performance is satisfactory to the Engineer and the City of Hialeah, the aggregate sum of: _____Dollars and _____Cents	$_____
4	Dedicated Allowance	Dedicated allowance for refurbishing the existing biological odor control system as provided by City-approved vendor, BIOREM Technologies, Inc., the sum of: Twenty-five thousand _____Dollars and Zero _____Cents	$ 25,000.00
5	Aggregate Sum	For performing **site restoration and clean-up** for the **Pump Station No. 12** including but not limited to asphalt paving, grading, driveways, sodding, landscaping, painting and any miscellaneous restoration work including all labor, materials and equipment required, the aggregate sum amount of: _____Dollars and _____Cents	$_____

_____ _____

Name of Bidder Signature of Bidder

Item No.	Quantity	Description	Total
6	Dedicated Allowance	Dedicated allowance for coordinating and assisting with Florida Power & Light (FPL) service upgrades to property, the sum of: Twenty-Five Thousand Dollars and Zero Cents	$25,000.00
7	Total	**TOTAL BID** **The sum of items 1 - 6, inclusive:** _____Dollars and _____Cents	$_____

Note: For a detailed description of each Proposal Item, refer to Section 01025 of the Specifications entitled "Measurement and Payment".

AWARD OF CONTRACT AND TIME OF COMPLETION

The contract, if awarded, shall be to the lowest responsive bidder, and most responsible bidder whose bid conforming to the specifications is the most advantageous to the CITY, considering prices bid, the experience, the qualifications of the bidder, and the bidders' current and immediately available resources. Bid must comply with the requirements necessary to render it formal.

The WORK will be substantially completed within **150 successive calendar days** from the commencement date stated in the Notice to Proceed. The WORK will be entirely complete within **180 successive calendar days** from the commencement date stated in the Notice to Proceed.

ADDENDA

Bidder further acknowledges the receipt of the following Addenda:

No.	Date
_____	_____
_____	_____
_____	_____

AMOUNTS SHALL BE SHOWN IN BOTH WORDS AND FIGURES. IN CASE OF DISCREPANCIES, THE AMOUNT SHOWN IN WORDS SHALL GOVERN FOR EACH BID ITEM AND TOTAL BASE BID.

_____ _____

Name of Bidder Signature of Bidder

The Bidder further proposes and agrees to begin work with an adequate force and with sufficient equipment and facilities on the date stated in the written notice issued and served upon him by the Engineer, and to complete the work included in this Proposal within the time stipulated, including delivery time for materials and equipment.

It is mutually agreed that time is of the essence of this contract and should the Contractor fail to complete the work within the specified time there shall be deducted from the compensation due the Contractor the amount of five hundred dollars ($500.00) per calendar day as fixed, agreed and liquidated damages for each calendar day elapsing, beyond the specified time (final) for completion or any authorized extension thereof. It is further agreed that said sum is not a penalty but is the stipulated amount of damages sustained by the owner.

_____ _____

Name of Bidder Signature of Bidder

SECTION 2

Bid Submittal Instructions & Format

IT IS THE RESPONSIBILITY OF THE BIDDER TO ENSURE THAT THE BID BEING SUBMITTED IS COMPLETE AND ADDRESSES ALL OF THE REQUIREMENTS SET FORTH IN THIS ITB.

PLEASE READ THE ENTIRE SOLICITATION CAREFULLY BEFORE SUBMITTING A BID.

2.1 GENERAL INSTRUCTIONS:

Bidders should carefully follow the format and instructions outlined in this Section 2, observing format requirements where indicated. All materials (except for plans and schematics, if any) are to be submitted on 8 1/2" X 11" paper, paginated and separated by tabs to identify each required section. Each Bid shall be neatly typed and double-sided on recycled paper, with normal margins and spacing. All documents and information must be fully completed and signed as required.

Please be concise in all responses. If any category is NOT APPLICABLE, expressly state that it is not applicable. Bids that do not include the required documents may be deemed NON-RESPONSIVE and may not be considered for evaluation.

2.2 COPIES:

Please submit an original Bid and clearly mark the "Original" as such. Three complete paper copies of the original Bid also must be submitted with the original Bid. In addition, one complete copy of the original signed Bid must be submitted to the City in an electronic (digital) format, in an Adobe (pdf) file, on a compact disk (CD), DVD, or USB Flash Drive. The CD, DVD, or USB Flash Drive must be clearly labeled with the Bidder's name, the Solicitation number, and the Solicitation title. If any one of the copies is incomplete, the Bid may be deemed non-responsive.

2.3 SUBMISSION OF BID PACKAGE:

Each Bid Package, original and copies shall, consist of two (2) separate sealed envelopes or other secured packaging; one (1) sealed envelope shall be labeled the "Qualifications Package" and the other sealed envelope shall be labeled "Cost Package". The original and the copies of the Qualifications Package may be submitted in one envelope or package. The original and the copies of the Cost Package also may be submitted in one envelope, but not in the envelope containing the Qualifications Package.

The outside of each and every sealed envelope or package must clearly indicate the name and number of this Solicitation (i.e., ITB Number: 2018-19-9500-00-012); the Bidder's name and address; and the name and telephone number of the Bidder's contact person. Each envelope shall be marked as either the Qualifications Package or the Cost Package. All of the forms, appendices, and other information provided by the Bidder shall be placed in the Qualifications Package, except for Section 1 – Bid Price Form, which shall be placed in the Cost Package.

Bids shall be delivered no later than the time and date specified in the Solicitation Timetable. After the deadline for submitting Bids, the Bid Packages will be opened and read in the Council Chambers by the Office of the City Clerk.

BIDS RECEIVED AFTER THE DEADLINE SPECIFIED IN THE SOLICITATION TIMETABLE WILL NOT BE CONSIDERED AND NO TIME EXTENSIONS WILL BE PERMITTED

Each Bid must be delivered to the City of Hialeah, Office of the City Clerk, 3rd floor, 501 Palm Avenue, Hialeah, FL 33010.

2.4 BID BOND/PERFORMANCE BOND

A Bid bond will be required. The bid surety shall be in the amount of 5% of the bid. A certified check or bank draft payable to the City of Hialeah in the same amount can be submitted as an alternative. Should the contractor fail to submit the bid bond, the bid will rejected.

Performance and Payment Bonds will be required if the contract amount exceeds $ 200,000.00. This bond is only required if the contractor is awarded the bid. It does not need to be submitted with the bid proposal. It must be submitted within 10 days of bid award, for the full amount of the contract.

2.5 TABBING OF SECTIONS:

Each section of the Bid shall be separated by a physical tab/divider to insure that necessary documents are not overlooked. You may label each tab (using consecutive numbers) as 1, 2, 3, etc. If a section does not apply to you, include a tab/divider in sequence and write "Not Applicable" (using consecutive numbers) on a sheet of paper and insert it as your response to that section.

2.6 COST PACKAGE

The Cost Package shall contain the Bid Price Form that is contained in Section 1 – Bid Price Form to this Solicitation. In Section 1 – Bid Price Form, the Bidder shall identify the rates per unit and any other applicable fee. This is the only document that needs to be included in the Cost Package.

2.7 QUALIFICATIONS PACKAGE

The Qualifications Package shall contain all of the information and forms requested in this ITB, except the form required for the Cost Package. The Qualifications Package shall be prepared in the following sequence and format:

CHAPTER 1 – LETTER OF INTENT

Each Bidder shall submit a letter of intent, which shall be signed by an officer of the company or other Person authorized to bind the Bidder to the terms presented in its Bid. The letter of intent must expressly state that the Bidder will provide the services requested in the ITB, in compliance with the terms of the ITB, for the prices offered and submitted with the Bid.

CHAPTER 2 – STATEMENT OF ORGANIZATION

Each Bidder shall provide information concerning the Bidder's basic organizational structure by completing Form 1. A Bidder may provide any additional information that will assist the City in understanding the Bidder's organization.

Each Bidder must submit a certificate or other appropriate document demonstrating that: (a) the Bidder is authorized or otherwise approved to conduct business in the State of Florida; and (b) if the Bidder is a corporation or limited liability corporation, the corporation is in good standing. Further, the Bidder shall submit a certificate, resolution, or other document confirming that the Person signing the City's forms is duly authorized to bind the Bidder to the terms in its Bid.

Each Bidder must state whether it currently is a registered vendor in the City of Hialeah. If the Bidder currently is registered, please submit the vendor's registration number issued by the City of Hialeah or other document to demonstrate that the Bidder is authorized to conduct business in the City. The Bidder should include the location of its offices, particularly the office that would oversee the required performance of this Agreement, if awarded to the bidder.

CHAPTER 3 – SUBCONTRACTORS

Each Bidder must identify each subcontractor (if any) that the Bidder intends to use for work to be performed under this ITB. The Bidder must complete Form 2, which is attached hereto, concerning its subcontractors. Among other things, the Bidder must describe the services to be provided by each subcontractor and demonstrate that the subcontractor is qualified to provide such services.

CHAPTER 4 – EXPERIENCE

2.7.1 Each Bidder must submit proof that it has worked on a minimum of three (3) contracts within the last five (5) years, in which the Bidder provided Florida cities, counties or other Florida governmental agencies of comparable populations to the City of Hialeah; or alternatively, each Bidder must submit proof that it has worked on a minimum of three (3) contracts of substantially similar scope of services and value/cost, within the last five (5) years, in which the Bidder provided similar services to non-governmental entities; or a combination of both with at least one contract being for work performed for a government entity. For each such contract, the Bidder must provide the following information:

(a) The name, telephone number, and email address (if available) for your client's contact person or representative for each contract;

(b) A narrative description of the services performed;

(c) Duration of the contract;

(d) The total dollar amount of the contract.

NO BID WILL BE CONSIDERED WITHOUT THIS LIST.

Each Bidder must identify each city and county in Florida that currently has a contract with the Bidder. For each of these cities and counties, please provide the name, telephone number, and e-mail address (if available) of the contact person for that city or county with direct supervision over the Bidder's performance of the work.

Each Bidder must disclose whether any of the contracts listed as part of Section A and B above, has been terminated or suspended. Bidder should include a brief explanation of the termination or suspension, including, without limitation, whether the contract was terminated for convenience or, as a result of Bidder's default.

Each Bidder should identify any applicable certification it has received.

Each Bidder is encouraged to provide additional information about other contracts that demonstrate the Bidder has the experience capabilities and qualifications to provide all of the services required under this ITB.

CHAPTER 5 – CAPACITY TO PERFORM

Each Bidder must provide information demonstrating that the Bidder will be able to dedicate sufficient personnel, inventory, certifications and other resources to perform the work required under the Agreement. Each Bidder must identify and describe the resources it has available to serve the City.

CHAPTER 6 – APPROACH TO CITY'S WORK

Each Bid must include a description of the systematic approach and actions to be taken to provide the services requested under the ITB. This systematic approach must describe, at a minimum, the established procedure proposed work or progress schedule change and Bidder's capability to process orders, including emergency orders, respond to complaints, and address disputes. The Bidder shall describe delivery process, response time, quality control, identify key personnel and equipment. The Bidder will rely on to perform the services pursuant to the requirements of the ITB.

CHAPTER 7 – BANKRUPTCY MATTERS

Each Bidder must identify any pending or threatened bankruptcy proceeding involving the Bidder, its parent, a subsidiary, or an affiliate. The Bidder also must identify any bankruptcy proceedings that involved the Bidder, its parent, a subsidiary, or an affiliate that were filed or pending on or after January 1, 2011. If the Bidder has been involved in any such proceeding, the Bidder should describe the basic facts concerning such proceeding.

CHAPTER 8 – FINANCIAL RESOURCES

Each Bidder shall provide the City with copies of financial statements for the last two (2) years. If the Bidder does not have audited financial statements, the Bidder may substitute non-audited financial statements and completed federal tax returns for the last two (2) years. Publicly traded corporations may provide pertinent copies of, or an electronic link to, the corporation's annual financial reports, annual audits, and similar filings with the U.S. Securities and Exchange Commission.

In all cases, the Bidder must provide a balance sheet, an income statement, and a statement of cash flow, or other professional acceptable alternative documents demonstrating that the Bidder has the financial resources necessary to provide the services contemplated by this ITB.

Each Bidder also must provide: (a) information concerning their lines of credit, including the total amount of all lines of credit and the amount currently available; and (b) one or more letters of reference from lenders or other financial institutions that can attest to the creditworthiness of the Bidder and their willingness to do business with the Bidder.

Pursuant to the Florida Public Records Law, all of the financial information provided to the City, as well as all of the other information submitted with the Bidder's Bid, will be available for public inspection after the Bids are opened, except as provided in Sections 119.071(1)(b) 2., and 286.0113, Florida Statutes. The Bidder must inform the City whether under F.S. 812.081(1) (c) such information is deemed a trade secret and provide its reasoning.

CHAPTER 9 – INSURANCE REQUIREMENTS

Each Bidder shall provide an "Information Only ACORD Certificate" in their Bid, identifying the City (ITB NO.: 2018-19-9500-00-012) as the Certificate Holder, demonstrating the Bidder's ability to obtain the required types and levels of insurance, as specified in Form 3 and Form 4. The ACORD certificate shall be issued by a company or companies authorized or otherwise approved to do business under the laws of the State of Florida.

CHAPTER 10 – LITIGATION HISTORY

Each Bidder shall identify each case in the last 7 years where:

a civil, criminal, administrative, bankruptcy or other similar proceeding was filed against the Bidder, if such proceeding arises from or is related to a dispute concerning the Bidder's rights, remedies or duties under a contract for similar services;

a city, county, or other governmental entity terminated a contract with the Bidder concerning similar services; or

administrative fines, liquidated damages, civil penalties, or other penalties (collectively "penalties") were assessed against or deducted from the Bidder's payments under a contract for similar services.

Each Bidder also shall identify each instance in which the Bidder paid more than ten thousand dollars ($10,000) to settle a dispute with a governmental entity concerning the Bidder's performance under contract for similar services, and such payment occurred on or after January 1, 2011. The Bidder shall identify each such settlement agreement, and the amount paid by the Bidder, unless the settlement agreement explicitly prohibits the disclosure of the agreement's terms, which shall be expressly stated as such by the Bidder.

For each case identified pursuant to this Chapter 10, the Bidder must describe the basic facts concerning the case, including the names of the parties and the current status of the case.

Each Bidder must disclose whether the Bidder, or any of its owners, officers, subsidiaries, or affiliates have been excluded, disqualified, or disbarred by any federal, state or local government or agency since January 1, 2010.

Each Bidder must disclose whether the Bidder, or any of its owners, officers, subsidiaries, or affiliates have in the last ten (10) years (i.e., on or after January 1, 2010): failed to qualify as a responsive Bidder for similar services; or refused to enter into a contract for similar services after an award had been made to the Bidder; or failed to complete a contract; or been declared to be in default in any contract for similar services. If any of these events have occurred, the Bidder should provide additional information to explain the basic facts concerning such event.

CHAPTER 11 – CRIMINAL CONVICTIONS, VIOLATIONS, AND PUBLIC ENTITY CRIMES

Each Bidder must provide a summary of each criminal conviction of the Bidder, or any of its owners, officers, subsidiaries, or affiliates for similar services, that occurred in the last 7 years. For the purposes of this Chapter 11, any Person who pleads "guilty" or "nolo contendere" or who is found guilty shall be deemed to have been convicted, notwithstanding a suspension of sentence or a withholding of adjudication.

Each Bidder also must provide a summary of each investigation or notice of violation initiated against the Bidder, or any of its owners, officers, subsidiaries, or affiliates by a local, state, or federal agency with regulatory jurisdiction over any aspect of the Bidder's operations on or after January 1, 2011 concerning an alleged or actual violation of applicable law.

Each Bidder must complete and submit Form 5, which is included in Section 6 of this ITB. Form 5 is the Public Entity Crimes Affidavit. Form 5 must be notarized (i.e., signed in the presence of a Notary Public or other official).

CHAPTER 12 – BIDDER'S NON-COLLUSION CERTIFICATION

Each Bidder must complete and execute the Non-Collusion Affidavit (Form 6), which is included in Section 6 of this ITB. Form 6 must be notarized.

CHAPTER 13 – CONFLICT OF INTEREST AND ETHICS

Each Bidder must at least that the Bidder does not violate any of the following conflict of interest provisions:

(a) To the best of its knowledge, no officer, director, agent, or employee of the Bidder, or any relative of an officer, director, agent, or employee of the Bidder, is also an employee of the City.

(b) To the best of its knowledge, no City employee owns, directly or indirectly, an interest of five percent (5%) or more in the Bidder's firm or any of its subsidiaries or affiliates.

(c) The Bidder does not own or have a financial interest in more than ten percent (10%) of any other Bidder, regardless of whether such ownership is direct or through a parent, subsidiary, or holding company of any other business entity.

Each Bidder shall list and describe any professional or financial relationship that it has or had with the City, its elected or appointed officials, its employees or agents, or any of its agencies or component units, during the past five (5) years (i.e., since January 1, 2013), together with a statement explaining why such

relationships do not constitute a conflict of interest relative to the services sought in this ITB. The list of professional relationships should include any contracts between the Bidder and the City. Please note that such relationships, standing alone, do not qualify or disqualify a Bidder. The Bidder shall have an on-going obligation to give the Acting Purchasing Manager prompt written notice of any other professional or financial relationships that it enters into with the City, its elected or appointed officials, its employees or agents, or any of its agencies or component units before the Agreement is executed.

Each Bidder must list all relationships that present potential, actual or perceived conflicts of interest in connection with the Bidder's potential work under this Solicitation. With regard to each such conflict, please provide a brief explanation of the facts and issues involved in the potential conflict. If the Bidder is not aware of any potential conflict, the Bidder should state there are no such conflicts.

CHAPTER 14 – DRUG-FREE WORKPLACE CERTIFICATION

Each Bidder shall certify that it has implemented a drug-free workplace program. A signed certification of compliance (Form 7 in Section 6 of this ITB) must be submitted with the Bid.

CHAPTER 15 – ACKNOWLEDGMENT OF ADDENDA

Each Bidder shall complete and sign the Acknowledgement of Addenda form (Form 8 in Section 6 of this ITB) and shall include the form in the Bid. In the event any Bidder fails to acknowledge receipt of such addenda, their Bid shall nevertheless be construed as though the addenda had been received and acknowledged, and the submission of the Bid shall constitute the Bidder's acknowledgment of receipt of all addenda, whether or not actually received by the Bidder.

CHAPTER 16 – CERTIFICATION TO ACCURACY OF BID

Each Bidder shall certify and attest, by executing Form 9 (Section 6 of this ITB), that all forms, affidavits and documents the Bidder has enclosed in the Bid are true and accurate. If the Bidder fails to attest to the truth and accuracy of such forms, affidavits and documents, the Bid shall be deemed non-responsive and it will not be considered. Form 9 must be notarized.

CHAPTER 17 – BIDDER'S ACKNOWLEDGMENT

Each Bidder must execute and submit Form 10, which is entitled "Bidder's Acknowledgment."

CHAPTER 18 – DISCLOSURE AFFIDAVIT

Each Bidder must complete and submit Form 11, which is entitled "City of Hialeah Disclosure Affidavit."

CHAPTER 19 – ASSIGNMENT OF ANTITRUST CLAIMS

Each Bidder must complete and submit Form 12, which is entitled "Assignment of Antitrust Claims."

CHAPTER 20 – APPENDIX A

Each Bidder must complete and submit the "Bid Submittal Form" contained in Appendix A of this ITB.

CHAPTER 21 – SUBMITTAL CHECKLIST

Each Bidder must complete and submit the "Submittal Checklist" contained in Appendix B of this ITB.

3 CONTRACT FORMS AND APPENDICES

The City's forms and appendices are contained in Section 6 of this ITB. The following forms and appendices must be signed, and notarized if required, and submitted in the following order in the Qualifications Package:

Appendix A	Bid Submittal Form
Appendix B	Submittal Checklist
Form 1	Bidder's Statement of Organization
Form 2	Subcontractors
Form 3	Insurance Requirements
Form 4	Insurance Check List
Form 5	Public Entity Crimes Affidavit
Form 6	Non-Collusion Affidavit
Form 7	Drug-Free Workplace
Form 8	Acknowledgment of Addenda
Form 9	Certification to Accuracy of Bid
Form 10	Bidder's Acknowledgement
Form 11	City of Hialeah Disclosure Affidavit
Form 12	Assignment of Antitrust Claims
Form 13	Bid Bond
Form 14	Contractor's Performance and Payment Bond
Form 15	Contractor's Performance and Payment Bond Cash
Form 16	Release of Lien

The following form must be submitted in the Cost Package:

Section 1 - Bid Price Form

Each form and appendix must be filled in completely, signed, and notarized. Copies of forms will NOT be accepted in the original package. E-mail is not an acceptable form of delivery for submissions in response to this ITB.

SECTION 3

Guidelines and General Information

Section 3
GUIDELINES AND GENERAL INFORMATION

3.1 CITY OVERVIEW

Hialeah, Florida (pop. 224,669) is a diverse community, ideally located midway between Miami and Fort Lauderdale and encompasses approximately 23 square miles. As the fifth largest city in the State of Florida, Hialeah is committed to growth in its business community, while also focusing on issues such as education, the arts, leisure activities and sustainability to provide a viable future for our residents and preserve the City's rich history since its incorporation in 1925.

The City currently has 1300+ employees and provides a wide range of governmental services including public safety/police services, parks and recreation, public works, water and sewer, planning, building and zoning, code enforcement, and community development to its citizens.

3.2 DEFINITIONS

The following terms, phrases, words and their derivations shall have the meaning given herein:

a) '**Award**' means the acceptance of a Bid, offer, or proposal by the City Council of the City of Hialeah.

b) '**Bidder**' means the Person, company, entity or organization submitting a Bid in response to this Invitation to Bid.

c) '**City**' means, depending on the context, either (a) the geographic area contained within the municipal boundaries of the City of Hialeah, Florida or (b) the government of the City, acting through the City council or its designees.

d) '**Department**' means the City of Hialeah Public Works Department.

e) 'Person' means authorized representative to fill out and submit Bid.

f) **'Solicitation'** means this Invitation to Bid.

g) '**Successful Bidder'** means the Bidder that receives an award of the Agreement from the City as a result of this Invitation to Bid.

h) '**Work**', '**Services**', '**Program**', '**Project**', or '**Engagement**' mean all matters and things that will require to be done by the Successful Bidder(s) in accordance with the scope of work and all terms and conditions of this Invitation to Bid.

3.3 INVITATION

This Invitation to Bid is extended to any Person, company, and organization that can satisfy the requirement(s) specified herein. The requirements presented in this Invitation to Bid represent the City's anticipated needs.

3.4 LOBBYING

All Bidders, their agents and proposed sub- consultants or subcontractors, are hereby placed on notice that neither the City Council members, any evaluation committee members, employees of the City or employees of any other project sponsoring agencies shall be lobbied either individually or collectively regarding this Invitation to Bid. Bidders, their agents and proposed sub-consultants or subcontractors are hereby placed on notice that they are prohibited from contacting any of these individuals for any purpose relating to the Invitation to Bid (e.g., general information, meetings of introduction, meals, etc.). Any Bid submitted by a Bidder, its agents and sub-consultants or subcontractors who violate these guidelines will not be considered for review. The Acting Purchasing Manager (identified on the cover page of this Invitation to Bid) shall be the only point of contact for questions and/or clarifications concerning the Invitation to Bid, the selection process and the negotiation and award procedures.

3.5 SUSPENSION OF CONTRACTORS FOR MATERIAL BREACH OF CITY CONTRACTS

The City may temporarily or permanently suspend contractors from doing business with the City whenever a contractor materially breaches its contract with the City.

In addition, the principals of any Bidders or its proposed subcontractors or sub consultants shall not attempt to do business with the City under a different name or form a new legal entity in order to do business with the City while the principals of the Bidder or its proposed subcontractors or sub consultants remain on the Suspension List. In the event there is any intentional misrepresentation, the Bidder further understands and accepts that any contract issued as a result of this Invitation to Bid shall be subject to immediate termination for default and suspension procedures by the City. The City, in the event of such termination, shall not incur any liability to the Bidder for any goods, services or materials furnished.

3.6 POINTS OF CONTACT/ TIMETABLE FOR INQUIRES

Bidders shall contact the Acting Purchasing Manager, identified on the cover page of this Invitation to Bid, for all inquiries related to this ITB. All Bidders' technical inquires shall be confirmed in writing either through the mail, via facsimile transmission or electronic mail.

Technical questions will not be entertained beyond the cut-off date indicated on the cover page.

3.7 ORAL REPRESENTATION

No oral representation made by any City staff or official shall be binding on the City. The contents of this Invitation to Bid and any subsequent addenda issued by the City shall govern all aspects of this Invitation for Bid.

3.8 ADDENDA

If any revisions to the Invitation to Bid become necessary (other than changes to the deadline for Bid submission), the City will notify all registered Bidders requesting the corresponding document at least three (3) calendar days before the date scheduled for opening the Bids. The City may revise the deadline for Bid submission at any time prior to the date and time scheduled for opening the Bids. **It is the responsibility of all Bidders to ascertain whether any addenda have been issued before the Invitation to Bid deadline submission by either calling or emailing with the City's Acting Purchasing Manager**.

3.9 CANCELLATION OF THE INVITATION FOR BID

The City reserves the right to cancel this Invitation to Bid and/or re-advertise and re-solicit the work at any time when determined to be in the best interest of the City.

3.10 DEVELOPMENT COSTS

Neither the City nor its representatives shall be liable for any expenses incurred by any Person in connection with the preparation, submission or presentation of a Bid in response to this Invitation to Bid. The Bid and the information in the Bid shall be provided at no cost to the City.

3.11 TAX EXEMPT STATUS

The City is exempt from Florida Sales and Federal Excise taxes on direct purchase of tangible property.

3.12 WITHDRAWAL OF BID

A Bidder may withdraw their submitted Bid by notifying the City in writing through an authorized representative at any time prior to the opening/submittal deadline. Individuals making the withdrawal shall provide evidence of serving as an authorized representative of the Bidder. Bids, once received, become the property of the City, and will not be returned to Bidders even when they are withdrawn from consideration.

3.13 PUBLIC RECORDS AND EXEMPTIONS

Upon receipt, Bids become "public records" and shall be subject to public disclosure consistent with Chapter 119, Florida Statutes. Bidders shall invoke the exemptions to disclosure provided by law, in the Bid, by providing the specific statutory authority for the claimed exemption, identifying the data or other materials to be protected and stating the reasons why such exclusion from public disclosure is necessary.

3.14 REJECTION OF BIDS

The City reserves the right to reject any and all Bids for reasons including, but not limited to, the following: (1) when such rejection is in the interests of the City; (2) if such Bid is deemed non-responsive; (3) if the Bidder is deemed not-responsible; or (4) if the Bid contains any materials irregularities. Minor irregularities contained in a Bid may be waived by the City. A minor irregularity is a variation from the Invitation to Bid that does not affect the price of the contract nor does it give a Bidder an advantage or benefit not enjoyed by other Bidders and does not adversely impact the City.

3.15 CONE OF SILENCE / CONFLICT OF INTEREST AND CODE OF ETHICS

After the advertisement of this Invitation to Bid, all communications concerning this Solicitation should be directed to the City's Acting Manager of the Purchasing Department. Potential Bidders and their agents and employees shall not contact the Mayor, any member of the City Council, or any member of the City staff, except the Acting Manager of Purchasing, to discuss this Solicitation. Notwithstanding any other provision of this section, the imposition of a cone of silence on this Invitation to Bid shall not preclude purchasing staff from obtaining industry comment or performing market research provided all communications related thereto with a potential offer or, service provider, Bidder, lobbyist, or consultant are in writing or are made at a duly noticed public meeting.

This Section 3.18 does not apply to oral communications at pre-Bid conferences, oral presentations before selection committees, contract negotiations, and public presentations made to the City Council during any duly noticed public meeting. A copy of all written communications must be filed with the City Clerk.

3.16 METHOD OF AWARD

The City plans to use a two-step process when evaluating Bids. First, each Bidder's Qualifications Package will be opened and evaluated to determine whether the Bidder is responsive and responsible. Pursuant to Section 2-811 of the City's Code, a responsive Bidder "means a person who has submitted a bid or proposal that conforms in all material respects to the invitation to bid. . .." A responsible Bidder "means a person who has the capability in all respects to fully perform the contract requirements and has the integrity and reliability that will ensure good faith performance."

The City reserves its right to take all steps it deems necessary to evaluate the Bidder's qualifications and bid. Among other things, the City may make additional inquiries of the Bidder and any other Person, request additional information, obtain credit reports, and/or contact other local governments that have entered into contracts with the Bidder. A Bidder that does not provide the information requested by the City may be disqualified from this Solicitation.

The Bidder's prices will be evaluated after the City concludes that a Bidder is responsive and responsible. The City intends to award this Project to the responsive and responsible Bidder that offers the City the lowest price to perform the work.

The City of Hialeah Public Works Department Director, Armando Vidal, or authorized designee will evaluate bids and recommend an award to the Mayor and the City Council. The City Council shall consider the City of Hialeah Director's, recommendation at a public meeting and may approve, reject, or modify such recommendation, as the City Council deems appropriate.

After the City Council selects one Bidder for the City's work, the selected Bidder shall execute the Agreement. Thereafter, the Mayor and City Clerk, acting on behalf of the City, shall execute the Agreement and provide a copy to the Successful Bidder.

3.17 PAYMENT

The City of Hialeah complies with Florida Statue 218.70, Florida Prompt Payment Act. Prompt payment is made within forty-five (45) days of date on which proper invoicing is received for goods and services and thirty (30) business days for construction services.

3.18 LEGAL REQUIREMENTS

Federal, State, County and City laws, ordinances, rules and regulations that in any manner affect the items covered herein apply. Lack of knowledge by the Bidder will in no way be a cause for relief from responsibility.

The individual executing this Bid on behalf of the Company warrants to the City that the Company is a Florida corporation duly constituted and authorized to do business in the State of Florida, is in good standing and that Company possesses all of the required licenses and certificates of competency required by the State of Florida and the County of Miami-Dade to provide the goods or perform the services herein described.

3.19 DISPUTES

In case of any doubt or difference of opinion as to the services to be furnished hereunder, the decision of the City shall be final and binding on both parties. Any bid protest shall be handled pursuant to Section 2-815.1 of the City Code.

3.20 PATENTS & ROYALTIES

The Bidder, without exception, shall indemnify and save harmless the City of Hialeah, Florida and its employees from liability of any nature or kind, including cost and expenses for, or on account of, any copyrighted, patented, or unpatented invention, process, or article manufactured or used in the performance of the contract, including its use by the City. If the Bidder uses any design, device or materials covered by letters, patent, or copyright, it is mutually understood and agreed, without exception, that the Bid prices shall include all royalties or cost arising from the use of such design, device, or materials in any way involved in providing the required goods or services.

3.21 OSHA

The Bidder warrants that the product and services supplied to the City shall conform in all respects to the standards set forth in the Occupational Safety and Health Act of 1970, as amended, and the failure to comply with this condition will be considered as a breach of contract. Any fines levied because of inadequacies to comply with these requirements shall be borne solely by the Bidder responsible for same.

3.22 SPECIAL CONDITIONS

Any Special Conditions that vary from these General Conditions shall have precedence.

3.23 ANTI-DISCRIMINATION

The Bidder certifies compliance with the non-discrimination clause contained in Section 202, Executive Order 11246, as amended by Executive Order 11375, relative to equal employment opportunity for all persons without regard to race, color, religion, sex or national origin.

3.24 BID BONDS, PERFORMANCE BONDS, CERTIFICATES OF INSURANCE

Bid Bonds, when required, shall be submitted with the Bid in the amount specified in The Advertisement. After acceptance of Bid, the City will notify the successful Bidder to submit a performance bond and certificate of insurance in the amount specified in The Advertisement.

3.25 FACILITIES

The City reserves the right to inspect the Bidder's facilities at any time with prior notice.

3.26 BID TABULATIONS

Bidders desiring a copy of the Bid tabulation may request same by enclosing a self-addressed stamped envelope with the Bid.

3.27 APPLICABLE LAW AND VENUE

The law of the State of Florida shall govern this ITB and the contract between the City of Hialeah and the successful Bidder. Any action concerning this ITB or the Agreement shall be brought exclusively in the state or federal courts in and for Miami-Dade County, Florida.

3.28 CLARIFICATION AND ADDENDA TO BID SPECIFICATIONS

If any person contemplating submitting a Bid under this Invitation for Bid is in doubt as to the true meaning of the specifications or other Bid documents or any part thereof, the Bidder must submit a request for clarification to the City of Hialeah Acting Purchasing Manager. All such requests for clarification must be made in writing and the person submitting the request will be responsible for its timely delivery.

Any interpretation of the Bid, if made, will be made only by Addendum duly issued by the City of Hialeah Acting Purchasing Manager. The City shall issue an Informational Addendum if clarification or minimal changes are required. The City shall issue a formal Addendum if substantial changes which impact the technical submission of Bids are required. A copy of such Addendum will be emailed to each Bidder receiving the Invitation for Bid. In the event of a conflict with the original Agreement, the Addendum shall govern all other Contract Documents to the extent specified. Subsequent addendum shall govern over prior addendum only to the extent specified.

3.29 LAWS, PERMITS AND REGULATIONS

The Bidder shall obtain and pay all licenses, permits and inspection fees as may be required by the Agreement and this ITB. The Bidder shall comply with all laws, ordinances, regulations, building code requirements applicable to the goods or services contemplated herein.

3.30 OPTIONAL CONTRACT USAGE

Other State agencies, and/or Governmental Entities in the State of Florida may purchase from the resulting contract, provided the City, has certified its use to be cost effective and in the best interest of the City.

3.31 FLORIDA PUBLIC RECORDS ACT

All material submitted regarding this Bid becomes the property of the City. Bids may be reviewed by any Person thirty (30) days after the public opening. Bidders should take special note of this as it relates to any proprietary information that might be included in their offer.

Any resulting contract may be reviewed by any Person after the contract has been executed by the City. The City has the right to use any or all information/material submitted in response to this Bid and/or any resulting contract from same. Disqualification of a Bidder does not eliminate this right.

3.32 STANDARDIZED CHANGES

Contract documents shall be modified, if necessary, to reflect the requirements of 23 CFR 635.109. The changed conditions contract clauses shall be made part of, and incorporated in this project which has been approved under 23 U.S.C. 106.

SECTION 4

General Conditions

SECTION 4
GENERAL CONDITIONS

THE CITY OF HIALEAH
HIALEAH, FLORIDA

4.1 **PERFORMANCE OF WORK:** The Contractor shall supply all labor, transportation, materials, machinery, tools, apparatus and equipment necessary for the completion of his work, and be accountable for the safe, proper and reasonable maintenance and use of the same during construction, contractor shall remove all construction equipment upon completion, and shall perform all work in the best and most workmanlike manner. Special care shall be taken by the Contractor in placing and removing stockpiles of material, and in the work in general to avoid unnecessary injury to either public property or other areas adjacent to the work.

4.2 **CONCURRENT WORK:** Work may be performed concurrently by the utilities in the City or the City's Contractor in the right-of-way and it shall be the responsibility of the Contractor to coordinate his work with the utility companies, the City and the City's Contractors.

4.3 **USE OF PUBLIC STREETS:** Construction shall be performed in such a manner as to provide a minimum of inconvenience to the residents of the area. Any earth or other excavated material spilled from trucks shall be removed by the Contractor and the streets shall be cleaned twice daily to the satisfaction of the Director of the Department of Public Works.

4.4 **EXISTING UTILITIES AND STRUCTURES:** It will be the Contractor's responsibility to exercise all caution in the vicinity of any utility. The Contractor shall be fully responsible for, and repair all damage to buildings, telephone or other cables, sewers, water pipes, pavement, driveways, walls, sprinkler systems, survey markers, or other structures which may be encountered whether or not shown on the plans. The Contractor shall have a utility check performed prior to any construction.

The locations of existing utilities have been prepared using the best information available however, the information is not guaranteed. The Contractor shall be responsible for determining the location, character and depth of all utilities. The Contractor shall be responsible for and repair all damage to pavement structures and utilities which may be encountered whether or not shown on the plans. The cost of restoration shall be included in the unit price stated in the proposal for the related work. No extras for restoration will be allowed.

The Contractor shall protect from damage all utilities, structures, surface and subsurface structures at or near the site of the work and shall repair any damage to such facilities resulting from failure to comply with the requirements of this contract or the failure to exercise reasonable care in the performance of the work. If the Contractor fails or refuses to repair any such damage promptly, the City may have the necessary work performed and charge the cost thereof to the Contractor.

At points where the Contractor's operations are adjacent to utility facilities, which if damaged, might result in expense, loss, disruption of service or other undue inconvenience to the public or to the owner, work shall not be commenced until all arrangements necessary for the protection thereof have been made by the Contractor. The Contractor shall be solely and directly responsible to the owner and operators of such utilities for any damage, injury, expense, loss, inconvenience, or delay caused by the Contractor's operations.

The Contractor shall not repair or attempt to repair utility damage but shall immediately contact the utility owner. The Contractor shall obtain the name, address, and telephone number of each utility company to contact. He shall submit to the Engineer/Architect this information.

The Contractor shall comply with the latest edition of the Florida Building Code and City Code regarding precautions to be taken in the protection of existing vegetation, structure, utilities and improvements.

The Contractor shall maintain access to fire hydrants and alarm boxes throughout the prosecution of the work. Hydrants and fire alarm boxes shall be kept clear and kept visible at all times unless approved otherwise. If visibility cannot be maintained, the Contractor shall provide clearly visible signs showing the location of the fire hydrant and fire alarm boxes.

The Contractor shall comply with the requirements of the Clean Air Act and the Federal Water Pollution Control Act as well as all other requirements specified in those regulations and guidelines promulgated thereunder.

4.5 **EXISTING LANDSCAPING:** The Contractor shall be fully responsible for maintaining in good condition, existing trees, grass and shrubs situated within the designated right-of-way or on private property adjacent to the work.

4.6 **EXISTING SIGNS AND UTILITY CASTINGS:** All existing signs and utility castings shall be preserved and shall remain the property of the City of Hialeah. Those not reused shall be delivered to the City, on a weekly basis.

4.7 **STOCK PILING MATERIALS:** Contractor shall not stock pile materials at the project site unless approved in writing by the Engineer/Architect.

4.8 **PERMITS:** The Contractor shall obtain all required occupational licenses and permits, etc., and pay all required fees. City Building Permits will be issued without charge covering Contract work for the City.

4.9 **EXTRAS:** Bills for extras will be allowed only when work is ordered in writing and approved by the Director of the Department of Public Works. No money will be allowed for extra work unless approved in writing, beforehand, by the Director of the Department of Public Works.

4.10 **CLEANING UP:** The Contractor will be required to leave the work and adjacent areas free of any accumulated rubbish or surplus materials on a daily basis, unless otherwise allowed by the Director of the Department of Public Works. In the event of failure or undue delay on the part of the Contractor, the City may employ such equipment and labor as may be necessary, and charge such costs against the Contractor and deduct the amount from the monies due the Contractor for work performed.

4.11 **TESTING:** The Engineer/Architect or other person designated by the Director of the Department of Public Works to supervise the work shall have the right at any time to have tests made on any material used on the job. All expenses for tests shall be borne by the City of Hialeah, except the cost of re-testing materials which failed to meet the specifications and waiting time due to Contractor failure to be ready for tests when scheduled. The cost and scheduling of such re-testing shall be the responsibility of the Contractor. All re-testing shall be done by the testing laboratory which tested the failed samples. The Contractor will inform the City of his source of materials with sufficient time to secure the necessary samples and perform the necessary tests. The Contractor shall request and receive inspections of specific phases of work as required elsewhere in these specifications. The Contractor shall provide current modified proctor test results for all fill material used on the job.

4.12 **PAYMENT** Payment will be made in full for all work performed, materials, labor, tools and equipment furnished, and incidental expenses necessary to complete the work. Payment shall be made on 90% of the monthly estimate and upon the presentation of partial releases of lien. Final payment shall be made upon presentation of a completion statement, unconditional final releases of lien, and after final acceptance by the City.

4.13 **ACCEPTANCE:** Acceptance by the City shall not relieve the Contractor of the responsibility of correcting any defective part of the work resulting from either workmanship or materials or replacing or repairing damaged property resulting from any phase of the Contractor's work.

4.14 **GUARANTEE:** The Contractor shall guarantee all materials and workmanship for a period of one year from the date of acceptance by the City. Prior to final payment, the Contractor shall submit in writing a letter stating that the work was completed and its workmanship and materials are guaranteed for a period of one year.

4.15 **LINE AND GRADE:** Where required as determined by the Engineer/Architect, the City will establish a base line and reference elevations. **All additional lines and grades required for completion of the work shall be furnished by the Contractor.**

4.16 **TRAFFIC MAINTENANCE:** The Contractor shall provide all temporary signage, striping, detouring, barricading, signals, competent flagmen, and etc. required in accordance with the minimum requirements of the latest Manual of Uniform Traffic Control Devices, whenever and wherever needed in furtherance of the project, and/or as directed by the Engineer/Architect. The Contractor shall also coordinate these operations with the City of Hialeah and Miami Dade County Department of Public Works. The Contractor shall supply the Engineer/Architect with a traffic maintenance plan.

It shall be the Contractors responsibility to protect the public and workmen from ongoing construction hazards.

4.17 **UNIFORMED POLICE:** When necessary the Contractor shall be responsible for obtaining the services of the uniformed police officers as needed or as directed by the Engineer/Architect. The Contractor shall be reimbursed for the direct, actual expenses for such uniformed police officers.

4.18 **DUST CONTROL:** Calcium chloride flakes between 1.0 and 1.25 pounds per square yard, or pellets between 0.80 and 1.0 pounds per square yard shall be applied to dust generating surfaces by the Contractor at any time in the Engineer/Architect discretion deems that dust generating surface (within the project area) a public nuisance and/or health hazard. The Engineer/Architect may also require the Contractor to apply moisture for dust control by equipment capable of applying the water uniformly at a reasonable rate. Daily watering may be used instead of calcium chloride if approved by the Engineer/Architect. Failure to exercise proper dust control measures will result in the City's implementing dust control and all cost shall be deducted from monies owed to the Contractor.

4.19 **INSPECTION:** Inspection will be required during all phases of construction, and it shall be the Contractor's responsibility to contact the Engineer/Architect or his representative when any inspection is being performed. The Contractor shall also be responsible for coordinating all inspections of work performed by subcontractors. Failure to contact the Engineer/Architect or his Representatives to obtain the required inspections shall be sufficient cause for rejection.

4.20 **LICENSES:** The Contractor and all subcontractors shall submit at the time of bidding, copies of all licenses held by the Company that pertain to the type of work to be performed under this contract. Failure to submit copies of licenses is grounds for rejection of the bid.

4.21 **CONTACT PERSON:** The Contractor shall provide the Engineer/Architect with a local (Miami Dade County) telephone number where the Contractor can be contacted 24 hours a day for the duration of the project.

4.22 **UTILITY COORDINATION:** The City will not be liable for any delay or added expense the Contractor experiences due to the actions of others, nor shall the City be held responsible for any damages which may be incurred, due to the actions of the Contractor or his representative.

4.23 **EXAMINATION OF PREMISES:** Before submitting proposals for his work, each bidder will be held to have examined the premises and satisfied himself as to the existing conditions under which he will be obligated to work, including all conditions which will in any way affect the work under this contract.

4.24 **NON-EXCLUSIVE CONTRACT:** Nothing in this contract shall prevent the City from employing other contractors to perform the same or similar work. This can include other contractors working concurrently on the same location.

4.25 **DRUG FREE WORKPLACE:** The Contractor shall be aware and comply with the requirements of Florida Statutes Section 287.087.

SECTION 5

Special Conditions

SECTION 5
SPECIAL CONDITIONS

THE CITY OF HIALEAH
HIALEAH, FLORIDA

5.1 **SCOPE OF WORK:** The objective of this ITB is to secure the services of an experienced and reliable contractor that is capable of upgrading one submersible wastewater pump station including, but not limited to, demolition of existing facilities including pumps, piping, electrical equipment, instrumentation, and structures; furnishing, installation, and maintenance of required temporary utilities, including bypass pumping; furnishing and installation of pumps and motors, panels, piping, valves, other appurtenances; construction of structures, including slabs and vaults; refurbishment of existing wet well; site restoration and improvements, including pavement, fencing, and lighting; testing and start-up services; and all other appurtenant miscellaneous items and work required for a complete project.

5.2 **COMPLETE PROJECT REQUIRED:** The specifications describe the various items or classes of work required enumerating or defining the extent of same where necessary to clarify the drawings, but failure to list any items shall not relieve the Contractor from furnishing, installing and performing such work where shown on the drawings, required by any part of the specifications or necessary for the satisfactory completion of the project.

5.3 **WORK SCHEDULE:** The Contractor shall submit schedules which show the order in which the Contractor proposes to carry out the work with dates for starting various parts of the work and estimated completion dates. The progress schedule shall be furnished to the Engineer/Architect prior to the conference date which will be established by the City.

5.4 **PRE-CONSTRUCTION CONFERENCE:** After the contract has been awarded and signed, but prior to commencement of work, a pre-construction conference shall be held. The conference shall be attended by authorized representatives of the City and Contractor. The purpose of this conference will be to review the Contractor's submitted progress schedule, clarify jurisdiction and to acquaint all parties present with the authorized representative to be notified. The Contractor will be notified in writing as to the date and place of the conference.

5.5 **AS-BUILT INFORMATION:** As work progresses, the Contractor must record all information pertaining to changes and deviations from the contract drawings with special attention to all underground installations. At completion of the job, the Contractor shall submit a complete set of reproducible as-built drawings to the City.

Additionally, the contractor shall maintain a field book with all deviations recorded. The completed as-built sketches and field books shall become the property of the City. As-built information must be supplied with each pay request. Failure to provide as-built information is cause to reject pay request.

5.6 **LIQUIDATED DAMAGES:** Should the Contractor, or in the case of default, the surety, fail to fully complete the work within the time stipulated in the proposal, the minimum sum of five hundred dollars ($500.00) per day shall be deducted from any money due the Contractor not as a penalty but as liquidated damages.

5.7 APPROVAL OF MATERIALS:

A. Whenever in these plans and/or specifications a certain brand of e e q u i p m e nt or material is specified, it is done for establishing the level of quality, capacity and the characteristics desired. Materials or products specified by the name of manufacturer or the brand or trade name or catalog reference shall be the basis of the bid.

B. The Contractor shall make written request for the use of alternate materials within ten (10) days after the Contract is signed, and before ordering any materials requiring approval. If the Contractor makes no request for approval of alternate materials within ten (10) days of the signing of the Contract, it shall be assumed that he intends to furnish the items specified.

C. The use of materials other than that specified without the written approval of the Engineer/Architect shall be sufficient reason for rejection of the work.

5.8 USE OF PUBLIC STREETS: Construction in the right-of-way or streets shall be performed in such a manner as to provide a minimum of inconvenience and maximum protection to the residents of the area. Access to all residents' homes shall be maintained at all times. A minimum of one traffic lane shall be open at all times.

5.9 EXISTING SIDEWALK: The Contractor shall preserve the existing sidewalk, if any, throughout the project unless otherwise directed by the Engineer/Architect.

5.10 RESTORATION OF SURVEY MARKERS: When existing survey markers are removed or destroyed as a result of the construction, it shall be the responsibility of the contractor to replace them using a registered licensed surveyor.

5.11 PROJECT LAYOUT: The contractor shall layout the proposed work and contact all utilities to verify utility locations. If changes are required, due to conflict or design, the Engineer/Architect will make the final determination.

5.12 WORKING HOURS: The normal City working hours are Monday through Friday 7:00 a.m. until 3:00 p.m.

5.13 NOTICE TO PROCEED: A single notice to proceed will be issued for this project. Upon receipt of the notice to proceed, the contractor shall commence work upon the site(s) within 10 working days and continue such work in an expeditious manner to a conclusion acceptable to the City's Engineer/Architect. No more than 7 consecutive days without construction activity will be allowed unless approved by the Engineer/Architect.

5.14 ENVIRONMENTAL PROTECTION:

General Requirements – The Contractor shall provide and maintain environmental insurance coverage protecting against the risk of damage or injury as of contractor work during the life of the Contract. Environmental protection shall be provided to correct conditions that develop during the performance of the work, or that are required to

control pollution that develops during the development of project. The Contractor's operations shall comply with all federal, state and local regulations pertaining to water, air, solid waste, and noise pollution.

Protection of Natural Resources – It is intended that the natural resources within the site and outside the limits of permanent Work performed under this Contract be preserved in their existing condition or be restored to an equivalent or improved condition upon completion of the Work. The Contractor shall confine his/her work activities to areas defined by the Contract Documents. All Work under this contract shall be performed in such a manner that any adverse environmental impacts are reduced to a level that is acceptable to the Engineer/Architect, and the City. At all times special measures shall be taken to prevent oily or hazardous substances from entering the ground, drainage areas, or local bodies of water.

Control and Disposal of Wastes – The Contractor shall transport and dispose of all waste in a manner that complies with Federal, State, and local requirements. The Contractor shall provide the Engineer/Architect with a copy of any state and/or local permits or licenses which reflect such agency's approval and compliance with applicable solid waste disposal regulations. The permits or licenses and the location of the disposal area shall be provided prior to transporting any waste material. Fueling and lubricating of equipment and motor vehicles shall be conducted in a manner that affords the maximum protection against spills and evaporation. Lubricants and waste oil shall be disposed of in accordance with approved procedures meeting federal, state and local regulations.

The maximum use of low-noise emission products as certified by the Environmental Protection Agency shall be made when available.

5.15 **SAFETY:** The Contractor shall be responsible for the safety of the Contractor's employees. The Contractor shall abide by all Federal, State, County, and City safety requirements and regulations. The Contractor is responsible to furnish the Contractor's employees with all required safety equipment. The Contractor is required to comply with all applicable OSHA regulations including, Right to know and Confined Space Entry.

The Contractor is fully responsible to furnish safety equipment to all of the Contractor's employees on the Owner's job site, including but not limited to safety glasses, gloves, hard hats, braces or any other required safety equipment. The Contractor is required to make certain that each employee is wearing the proper safety clothing, including shoes, and utilizing all safety equipment and taking all necessary safety precautions at all times on the worksite.

5.16 **CONFINED SPACE ENTRY PERMIT:** The Contractor must comply with all the provisions contained in OSHA 1910.146 and shall show proof of compliance with the first project invoice. No payment shall be made until such proof is presented and approved by the CITY.

SECTION 6

Forms and Appendices

Form 1. Bidder' s Statement of Organization

1. Full Name of Bidder's Business:

   _____

2. Bidder's Principal Business Address:

   _____

   _____

   _____

3. Name, phone number, and e-mail address of Bidder's representative:

   _____

   _____

   _____

4. Form of Bidder's Business (e.g., Corporation, Partnership, Joint Venture, Other):

   _____

5. If Bidder is a partnership, please indicate the following:

   (a) Date of organization: _____

   (b) General or Limited Partnership _____

   (c) If a Limited Partnership, identify the general partners: _____

   _____

   (d) Provide the name and address of each partner:

Name	Address	Title

6. If Bidder is a corporation, identify the state where the Bidder was incorporated and the date of incorporation:_____

7. If the Bidder is a foreign corporation, please identify:

Form 1. Bidder' s Statement of Organization

(continued)

(a) The date of registration with the Florida Secretary of State

_____

(b) The name of the Bidder's Registered Agent

_____

(c) The address of the Bidder's Registered Agent

_____

8. If the Bidder is a corporation, provide the names and addresses of the Bidder's President, Vice President, and Treasurer. If the Bidder is a limited liability company, provide the name(s) and address(es) of the manager or managing members.

_____

_____

9. If the Bidder is a Joint Venture, identify the date of the joint venture agreement:

_____

10. Provide the Bidder's Federal Employer Identification Number:

_____

11. How many years has the Bidder been in business under its present name? _____ years

12. If the Bidder is operating under a fictitious name, submit evidence of compliance with the Florida Fictitious Name Statute.

_____

_____
(signature)

sworn to and subscribed before me this_____day of_____, 2018.

Personally known _____
OR Produced Identification_____

_____
(Type of identification)

_____
Notary Public - State of _____

_____
(Printed typed or stamped
commissioned name of notary public)

Form 2. Subcontractors

Use additional sheets if needed

If the Bidder will use any subcontractors, the Bidder shall provide: (a) the name, address, and telephone number of each subcontractor; (b) the name and telephone number of the subcontractor's contact person; (c) the percentage of work the contractor will assign to each subcontractor; (d) a clear description of the work that will be performed by each subcontractor; (e) a description of the subcontractor's qualifications to perform the City's work; and (f) a description of the qualifications of the subcontractor's employees that will be responsible for the City's work. _____

_____

_____

_____

_____

_____

_____

_____
(signature)

Sworn to and subscribed before me this_____day of_____, 2018.

Personally known _____ _____

OR Produced Identification_____ Notary Public - State of _____

_____ _____
(Type of identification) (Printed typed or stamped commissioned name of notary public)

Form 3. Insurance Requirements

See Insurance Check List for applicability to this Solicitation and the Agreement.

The Contractor shall be responsible for its work and every part thereof, including all materials, tools, appliances and property of every description used in connection therewith. The Contractor shall specifically and distinctly assume all risks of damage or injury to property or persons used or employed on or in connection with the work and of all damage or injury to any person or property, wherever located, resulting from any action or inaction of the Contractor under the Agreement or in connection with the work.

The Contractor shall, during the work under the Agreement, including extra work in connection therewith:

Maintain Worker's Compensation and Employer's Liability Insurance to meet the statutory requirements of the State of Florida, to protect themselves from any liability or damage which may arise by virtue of any statute or law in force or which may hereafter be enacted.

Maintain General Liability Insurance in amounts prescribed by the City to protect the Contractor in the interest of the City against all risks of injury to persons (including death) or damage to property wherever located resulting from any action or operation under the Agreement or in connection with the work.

Maintain Automobile Liability Insurance, including Property Damage, covering all used or operated automobiles and equipment used in connection with the work.

When naming the City of Hialeah as an additional insured onto the Contractor's policies, the insurance companies hereby agree and will endorse the policies to state that the City will not be liable for the payment of any premiums or assessments. An endorsement to the policy(ies) shall be issued accordingly and the certificate will state the above.

The insurance coverage shall extend to and include the contractual indemnity and hold harmless language contained in the Agreement.

Original, signed certified Insurance Certificates evidencing such insurance and such endorsements as prescribed herein shall be filed by the Contractor with the City of Hialeah, and approved by the City before the work is started. The certificate must state the Solicitation Number and Title.

Products and Completed Operations Liability shall be provided, as stated in the Insurance Check List.

The Contractor will secure and maintain policies for subcontractors. All policies shall be made available to the City upon demand.

The Contractor shall take note of the indemnification contained in the Agreement and shall obtain and maintain contractual liability insurance in adequate limits for the sole purpose of protecting the City of Hialeah under the Agreement from any and all claims arising out of the Contractor's operations.

Further, the Contractor will notify its insurance agent without delay of the existence of the indemnification requirement contained within the Agreement, and furnish a copy of the Agreement to the insurance agent.

The City shall be named as additional insured on the Automobile and General Liability policy(ies) with proof to be stated on the Certificates provided to the City and this coverage to be primary to all other coverage the City possesses.

SUPERVISION

Contractual and any other Liability Insurance provided under the Agreement shall not contain a supervision, inspection, engineering services exclusion that would preclude the City from supervising and/or inspecting the Contractor's work. The Contractor shall assume all on-the-job responsibility as to the control of Persons directly employed by the Contractor and/or the subcontractor and Persons employed by the subcontractor.

CONTRACTS

Nothing contained in the Solicitation or Agreement shall be construed as creating any contractual relationship between any subcontractor and the City.

Form 3. Insurance Requirements

(continued)

The Contractor shall be as fully responsible to the City for the acts and omissions of the subcontractors and of persons employed by them, as the Contractor is for acts and omissions of Persons directly employed by the Contractor.

PROTECTION

Precautions shall be exercised at all times for the protection of Persons, including employees, and property. All existing structures, utilities, roads, services, trees, shrubbery, etc., shall be protected against damage or interrupted service at all times by the Contractor during the term of the Agreement. The Contractor shall be held responsible for any damage to any Person or property occurring by reason of the Contractor's operation under the Agreement.

CROSS LIABILITY

It is understood and agreed that the inclusion of more than one insured under the Contractor's policy shall not restrict the coverage provided by the policy for one insured hereunder with respect to a liability claim or suit by another insured hereunder or an employee of such other insured and that with respect to claims against any insured hereunder, other insurers hereunder shall be considered members of the public; but the provisions of this Cross Liability clause shall apply only with respect to liability arising out of the ownership, maintenance, use, occupancy or repair for such portions of the premises insured hereunder as are not reserved for the exclusive use of occupancy of the insured against whom claim is made or suit is filed.

CERTIFICATE OF INSURANCE

On an Accord Certificate of Insurance binder, on the Cancellation Clause, the following shall be deleted: The word "endeavor" as well as "...but failure to mail such notice shall impose no obligation or liability of any kind upon the company".

OUT-OF-STATE NON-RESIDENT AGENT

When a certificate is issued by an out-of-state non-resident agent with a "920" License, the name, address and telephone number of the Florida Resident Agent must be listed in the space provided on the checklist and on the Certificate of Insurance provided.

SMALL DEDUCTIBLE POLICIES

All policies issued to cover the insurance requirements herein shall provide full coverage from the first dollar of exposure. No deductibles will be allowed in any policies issued on this contract unless specific safeguards have been established to assure an adequate fund for payment of deductibles by the insured. These safeguards shall be in form of escrow accounts or other method established by the Risk Manager to safeguard to the City's interests and those interests of any claimants under the contractor's policies.

_____
(signature)

Sworn to and subscribed before me this_____day of_____, 2018.

Personally known _____ _____

OR Produced Identification_____ Notary Public - State of _____

_____ _____
(Type of identification) (Printed typed or stamped commissioned name of notary public)

Form 4. Insurance Check List

ITB No. 2018-19-9500-00-012

	INSURANCE	LIMITS
X 1.	WORKERS' COMPENSATION AND EMPLOYEE'S LIABILITY POLICY VENDOR. AGREEMENT.	STATUTORY LIMITS OF THE STATE OF FLORIDA, AS PROVIDED IN THE ISSUED IN NAME OF
X 2.	COMMERCIAL GENERAL LIABILITY PREMISES OPERATIONS INCLUDED; PRODUCTS AND COMPLETED OPERATIONS INCLUDED; INDEPENDENT CONTRACTORS (O.C.P.) INCLUDED; ELEVATORS INCLUDED; SUPERVISION EXCLUSION DELETED; PERSONAL INJURY LIABILITY INCL	$1,000,000 SINGLE LIMIT FOR BODILY INJURY AND PROPERTY DAMAGE COMBINED EACH OCCURRENCE, AS PROVIDED IN THE AGREEMENT.
X 3.	BROAD FORM PROPERTY DAMAGE ENDORSEMENT	AS PROVIDED IN THE AGREEMENT.
X 4.	CONTRACTUAL INDEMNITY/HOLD HARMLESS ENDORSEMENT EXACTLY AS WRITTEN IN "INSURANCE REQUIREMENTS' OF SPECIFICATIONS	$1,000,000 SINGLE LIMIT FOR BODILY INJURY & PROPERTY DAMAGE COMBINED EACH OCCURRENCE, AS PROVIDED IN THE AGREEMENT.
X 5.	AUTOMOBILE LIABILITY OWNED NON-OWNED/HIRED AUTOMOBILES INCLUDED	$1,000,000 SINGLE LIMIT FOR BODILY INJURY & PROPERTY DAMAGE COMBINED EACH OCCURRENCE, AS PROVIDED IN THE AGREEMENT.
X 6.	UMBRELLA LIABILITY	$5,000,000 EXCESS OF ALL PRIMARY COVERAGE, AS PROVIDED IN THE AGREEMENT.
__ 7.	GARAGE LIABILITY	$1,000,000 SINGLE LIMIT FOR BODILY INJURY AND PROPERTY DAMAGE COMBINED EACH OCCURRENCE
__ 8.	GARAGEKEEPER'S LEGAL LIABILITY	$100,000 EACH OCCURRENCE

X 9. THE CITY MUST BE NAMED BY ENDORSEMENT AS ADDITIONAL INSURED ON THE INSURANCE POLICY AND THE FOLLOWING MUST ALSO BE STATED ON THE CERTIFICATE. "THESE COVERAGES ARE PRIMARY AND NON-CONTRIBUTORY TO ALL OTHER COVERAGES THE CITY POSSESSES FOR THIS CONTRACT ONLY."

__ 10.	TEACHERS PROFESSIONAL LIABILITY	$1,000,000 EACH CLAIM
__ 11.	LIQUOR LEGAL LIABILITY	$1,000,000 EACH OCCURRENCE

__ 12. CROSS LIABILITY OR SEVERABILITY OF INTERESTS CLAUSE ENDORSEMENT

CITY OF HIALEAH
INSURANCE CHECK LIST
(continued)

INSURANCE	LIMITS
x 13. XCU PROPERTY DAMAGE EXCLUSION DELETED AND THIS COVERAGE WILL PROVIDED	
___14. BUILDERS RISK	FULL CONSTRUCTION COSTS OF THE PROJECT
___15. OTHER INSURANCE AS INDICATED BELOW:	
X 16. THIRTY (30) DAYS CANCELLATION NOTICE REQUIRED	
X 17. BEST'S GUIDE RATING	A-X OR BETTER OR ITS EQUIVALENT
X 18. THE CERTIFICATE MUST STATE THE BID NUMBER AND TITLE	
___19. CYBER LIABILITY	$1,000,000 EACH CLAIM
___20. INFORMATION TECHNOLOGY ERRORS AND OMMISSIONS INCLUDING CYBER LIABILITY AND PRIVACY PROTECTION	$1,000,000 EACH CLAIM
X 21. POLLUTION LIABILITY	$1,000,000 EACH CLAIM
___22. ERRORS & OMMISSIONS/PROFESSIONAL LIABILITY	$5,000,000 EACH CLAIM
___23. BUSINESS PERSONAL PROPERTY COV.	LIMITS EQUALING REPLACEMENT COST OF VENDOR'S PROPERTY
___24. SPOILAGE COVERAGE	LIMITS EQUALING REPLACEMENT COST OF VENDOR'S PROPERTY
___25. LOSS OF INCOME COVERAGE.	LIMITS ADEQUATE TO COVER LOSS OF INCOME AND EXTRA EXPENSE FOR 12 MONTHS
__26. CRIME COVERAGE	EMPLOYEE DISHONESTY INCLUDING FORGERY, COMPUTER FRAUD AND WIRE TRANSFER FRAUD

CITY OF HIALEAH
INSURANCE CHECK LIST
(continued)

WHEN USING THE "ACCORD" FORM OF INSURANCE CERTIFICATE, PLEASE NOTE THAT IN THE "CERTIFICATE HOLDER" BOX, THE FOLLOWING MUST BE SHOWN:

CITY OF HIALEAH, A MUNICIPAL CORPORATION, 501 PALM AVENUE, HIALEAH, FL. 33010

BIDDER AND INSURANCE AGENT STATEMENT:

We understand the Insurance Requirements of this Solicitation and we recognize that evidence of insurability may be required within five (5) days after Bids are opened.

Bidder's Name	Insurance Agency
Signature of Bidder's Representative	Signature of Bidder's Agent
Signature of Florida Resident Agent	Agent's Errors and Omissions Policy:
Name and Location of Agency	Policy Company; Expiration Date; Amount of Coverage; Policy Number

Form 5. Public Entity Crimes Affidavit

SWORN STATEMENT PURSUANT TO SECTION 287.133(3)(a), FLORIDA STATUTES, ON PUBLIC ENTITY CRIMES

THIS FORM MUST BE SIGNED AND SWORN TO IN THE PRESENCE OF A NOTARY PUBLIC OR OTHER OFFICIAL AUTHORIZED TO ADMINISTER OATHS.

1. This sworn statement is submitted to the City of Hialeah, Florida, by _____

   _____
   (print individual's name and title)

   For _____
   (print name of entity submitting sworn statement)

   whose business address is

   _____

   _____

   and (if applicable) its Federal Employer Identification Number (FEIN) is _____

   (If the entity has no FEIN, include the Social Security Number of the individual signing this sworn statement: _____.)

2. I understand that a "public entity crime" as defined in Paragraph 287.133(1) (g), **Florida Statutes,** means a violation of any state or federal law by a person with respect to and directly related to the transaction of business with any public entity or with an agency or political subdivision of any other state or of the United States, including, but not limited to, any Bid or contract for goods or services to be provided to any public entity or an agency or political subdivision of any other state or of the United States and involving antitrust, fraud, theft, bribery, collusion, racketeering, conspiracy, or material misrepresentation.

3. I understand that "convicted" or "conviction" as defined in Paragraph 287.133(1) (b), **Florida Statutes,** means a finding of guilt or a conviction of a public entity crime, with or without an adjudication of guilt, in any federal or state trial court of record relating to charges brought by indictment or information after July 1, 1989, as a result of a jury verdict, non-jury trial, or entry of a plea of guilty or nolo contendere.

4. I understand that an "affiliate" as defined in Paragraph 287.133 (1) (a), **Florida Statutes,** means:

   1. A predecessor or successor of a person convicted of a public entity crime; or
   2. An entity under the control of any natural person who is active in the management of the entity and who has been convicted of a public entity crime. The term "affiliate" includes those officers, directors, executives, partners, shareholders, employees, members, and agents who are active in the management of an affiliate. The ownership by one person of shares constituting a controlling interest in another person, or a pooling of equipment or income among persons when not for fair market value under an arm's length agreement, shall be a prima facie case that one person controls another person. A person who knowingly enters into a joint venture with a person who has been convicted of a public entity crime in Florida during the preceding 36 months shall be considered an affiliate.

5. I understand that a "person" as defined in Paragraph 287.133 (1) (e) **Florida Statutes,** means any natural person or entity organized under the laws of any state or of the United States with the legal power to enter into a binding contract and which bid or applies to bid on contracts for the provision of goods or services let by a public entity, or which otherwise transacts or applies to transact business with a public entity. The term "person" includes those officers, directors, executives, partners, shareholders, employees, members, and agents who are active in management of an entity.

6. Based on information and belief, the statement which I have marked below is true in relation to the entity submitting this sworn statement **(INDICATE WHICH STATEMENT APPLIES)**.

   ____Neither the entity submitting this sworn statement, nor any of its officers, directors, executives, partners, shareholders, employees, members, or agents who are active in the management of the entity, nor any affiliate of the entity has been charged with and convicted of a public entity crime subsequent to July 1, 1989.

Form 5. Public Entity Crimes Affidavit

(continued)

____The entity submitting this sworn statement, or one or more of its officers, directors, executives, partners, shareholders, employees, members, or agents who are active in the management of the entity, or an affiliate of the entity has been charged with and convicted of a public entity crime subsequent to July 1, 1989.

____The entity submitting this sworn statement, or one or more of its officers, directors, executives, partners, shareholders, employees, members, or agents who are active in the management of the entity, or an affiliate of the entity has been charged with and convicted of a public entity crime subsequent to July 1, 1989. However, there has been a subsequent proceeding before an Administrative Law Judge of the State of Florida, Division of Administration Hearings and the Final Order entered by the Administrative Law Judge determined that it was not in the public interest to place the person or entity submitting this sworn statement on the convicted vendor list. (attach a copy of the final order)

I UNDERSTAND THAT THE SUBMISSION OF THIS FORM TO THE CONTRACTING OFFICER FOR THE PUBLIC ENTITY IDENTIFIED IN PARAGRAPH 1 (ONE) ABOVE IS FOR THAT PUBLIC ENTITY ONLY AND, THAT THIS FORM IS VALID THROUGH DECEMBER 31 OF THE CALENDAR YEAR IN WHICH IT IS FILED. I ALSO UNDERSTAND THAT I AM REQUIRED TO INFORM THE PUBLIC ENTITY PRIOR TO ENTERING INTO A CONTRACT IN EXCESS OF THE THRESHOLD AMOUNT PROVIDED IN SECTION 287.017, FLORIDA STATUTES FOR CATEGORY TWO OF ANY CHANGE IN THE INFORMATION CONTAINED IN THIS FORM.

_____
(signature)

Sworn to and subscribed before me this_____day of_____, 2018.

Personally known _____ _____

OR Produced Identification_____ Notary Public - State of _____

_____ _____
(Type of identification) (Printed typed or stamped commissioned name of notary public)

Form 6. Non-Collusion Affidavit

State of _____

County of _____

_____, being first duly sworn,
deposes and says that:

(1) He/She is_____[title] of_____[name of entity], the Bidder that has submitted the attached Bid:

(2) He/She is fully informed respecting the preparation and contents of the attached Bid and of all pertinent circumstances respecting such Bid:

(3) Such Bid is genuine and is not a collusive or sham Bid;

(4) Neither the said Bidder nor any of its officers, partners, owners, agents, representatives, employees or parties in interest, including this affiant, has in any way colluded, conspired, connived or agreed directly or indirectly with any other Bidder, firm or person to submit a collusive or sham Bid in connection with the Contract for which the attached Bid has been submitted or to refrain from bidding in connection with such Contract, or has in any manner, directly or indirectly, sought by agreement or collusion or communication or conference with any other Bidder, firm or person, or to fix any overhead, profit or cost element of the Bid price or the Bid price any other Bidder, or to secure through any collusion, conspiracy, connivance or unlawful agreement any advantage against the **City of Hialeah** or any person interested in the proposed Contract; and

The price or prices quoted in the attached Bid are fair and proper and are not tainted by any collusion, conspiracy, connivance or unlawful agreement on the part of the Bidder or any of its agents, representatives, owners, employees, or parties in interest, including this affiant.

(Name)_____

_____
(Title)

Subscribed and sworn to before me

This_____day of_____, 2018

Title _____

_____

_____
(Title)

My commission expires _____

Form 7. Drug-Free Workplace

The undersigned Bidder, in compliance with Section 287.087, Florida Statutes, hereby certifies that _____does:
(Name of Business)

1. Publish a statement notifying employees that the unlawful manufacture, distribution, dispensing, possession, or use of a controlled substance is prohibited in the workplace and specifying the actions that will be taken against employees for violations of such prohibition.
2. Inform employees about the dangers of drug abuse in the workplace, the business's policy of maintaining a drug-free workplace, any available drug counseling, rehabilitation, and employee assistance programs, and the penalties that may be imposed upon employees for drug abuse violations.
3. Give each employee engaged in providing the commodities or contractual services that are proposed a copy of the statement specified in subsection (1).
4. In the statement specified in subsection (1), notify the employees that, as a condition of working on the commodities or contractual services that are under bid, the employee will abide by the terms of the statement and will notify the employer of any conviction of, or plea of guilty or nolo contender to, any violation of Chapter 893 or of any controlled substance law of the United States or any state, for a violation occurring in the workplace no later than five (5) days after such conviction.
5. Impose a sanction on, or require the satisfactory participation in a drug abuse assistance or rehabilitation program if such is available in the employee's community, by any employee who is so convicted.
6. Make a good faith effort to continue to maintain a drug-free workplace through implementation of this section.

As the person authorized to sign this statement, I hereby certify that the Bidder has established a drug-free workplace program that complies with the requirements set forth above pursuant to Section 287.087, Florida Statutes.

Name of Bidder: _____

Signature of Bidder's Agent _____

Printed Name of Bidder's Agent _____

Title:_____

Date:_____

_____
(signature)

Sworn to and subscribed before me this_____day of_____, 2018.

Personally known _____ _____

OR Produced Identification_____ Notary Public - State of _____

_____ _____
(Type of identification) (Printed typed or stamped commissioned name of notary public)

Form 8. Acknowledgement of Addenda

The Bidder hereby acknowledges the receipt of the following addenda, which were issued by the City and incorporated into and made part of this ITB. The Bidder acknowledges that it is solely responsible for ensuring that it is aware of, and in receipt of, all addenda.

ADDENDUM NUMBER	DATE RECEIVED	PRINT NAME OF BIDDER'S AGENT	TITLE OF BIDDER'S AGENT	SIGNATURE OF BIDDER'S AGENT

_____
(signature)

Sworn to and subscribed before me this_____day of_____, 2018.

Personally known _____ _____

OR Produced Identification_____ Notary Public - State of _____

_____ _____

(Type of identification) (name of notary public)

Form 9. Certification to Accuracy of Bid

The undersigned individual, being duly sworn, hereby deposes and says:

1. I,_____[insert name of Bidder's officer], am duly authorized to execute and submit this Bid on behalf of the Bidder, _____[insert name of Bidder].

2. I am fully informed respecting the preparation and contents of the attached Bid and all of the forms, affidavits, and documents submitted in support of such Bid.

   a. All of the information contained in the forms, affidavits and documents submitted in support of this Bid is true and accurate;
   b. No information that should have been included in such forms, affidavits and documents has been omitted; and
   c. No information in such forms, affidavits or documents is false or misleading.

3. By signing and submitting this Bid in response to the City's ITB, the Bidder acknowledges and agrees that:

   a. the Bidder has carefully read this ITB;
   b. the Bidder has become fully informed about the local conditions, including the nature and extent of the work to be performed, and has examined and evaluated all relevant issues;
   c. the Bidder understands and accepts the conditions, limitations, and obligations imposed on the Bidder by this ITB;
   d. the Bidder's Bid is not contingent upon any conditions, limitations, or changes to this ITB;
   e. the Bidder's Bid is a binding offer that will remain in effect and be available to the City for one hundred eighty (180) days after the submittal of this Bid;
   f. if selected by the City, the Bidder shall provide the required insurance certificates within fifteen (15) days of receiving the City's written notice of award;
   g. if selected by the City, the Bidder will provide all of the services required under the ITB, in compliance with the terms and conditions contained in the ITB, at the Rates set forth on the Bidder's cost forms, which are attached to this Bid; and
   h. the Bidder has sought and received the assistance of legal counsel, as necessary, before submitting this Bid in response to the City's ITB.

Dated this_____day of_____, 2018.

_____
Name of Bidder

_____
Signature of President/Partner/Owner/Manager

_____

Form 9. Certification to Accuracy of Bid

(continued)

Printed Name of President/Partner/Owner/Manager and Title

_____

Signature of Secretary

_____

Printed Name of Secretary

The Bidder is a Partnership:_____; Corporation:_____; Limited Liability Corporation _____; or other business entity_____; and is authorized to do business in the State of Florida.

Witness my hand and official notary seal/stamp on_____the day and year written above.

STATE OF_____)
) SS:
COUNTY OF_____)

BEFORE ME, an officer duly authorized by law to administer oaths and take acknowledgments, personally appeared_____(name) as_____(title), of _____ _____(Bidder), an organization authorized to do business in the State of Florida, and acknowledged and executed the foregoing document as the proper official of_____(Bidder) for the use and purposes mentioned in it and affixed the official seal of the corporation, and that the instrument is the act and deed of that corporation. He/she is personally known to me or has produced_____as identification.

IN WITNESS OF THE FOREGOING, I have set my hand and official seal in the State and County aforesaid on this_____day of_____, 2018.

_____

NOTARY PUBLIC

My Commission Expires:

Form 9. Certification to Accuracy of Bid

(continued)

Signature Instructions:

All signatures must be in **BLUE** ink.

If the Bidder is a CORPORATION, the name of the corporation must be listed, in full, and both the President and Secretary must sign the form, OR if one signature is permitted by the corporation's by-laws, a copy of the by-laws must be furnished to the City as part of the Bid.

If the Bidder is a LIMITED LIABILITY CORPORATION, the name of the limited liability corporation must be listed in full, and the Manager or Managing Members must sign the form.

If the Bidder is a PARTNERSHIP, the full name of each partner should be listed, followed by the name that the Bidder is doing business as. Any partner may sign the form.

If the Bidder is operating as any other type of business entity, the name(s) of the Bidder's authorized representative(s) must be listed and the authorized representative(s) must sign the form. A copy of the appropriate documents evidencing legal binding authority to sign on behalf of the Bidder must be furnished to the City as part of the Bid.

Form 10. Bidder's Acknowledgment

SUBMIT BIDS TO: **CITY OF HIALEAH** **OFFICE OF THE CITY CLERK** **501 PALM AVENUE, 3rd Floor** **HIALEAH, FL 33010**			**CITY OF HIALEAH** **INVITATION TO BID** **Bidder Acknowledgment**
Page 1 of 3	**Telephone Number** **(305) 883-5988**	**Mailing Date**	**Bid No.** **ITB NO.: 2018-19-9500-012**
Bid may not be withdrawn within 180 DAYS after the Bid opening. April 2, 2019		**Bid Title:** ITB – Pump Station 12 - Upgrades	

All awards made as a result of this Bid shall conform to applicable Florida Statutes and City of Hialeah Charter and Ordinances	**Reason for "no Bid"**	
NAME OF VENDOR	**AREA CODE**	**TELEPHONE NUMBER**
MAILING ADDRESS	**BUSINESS ADDRESS**	
CITY – STATE – ZIP CODE		
I certify that this Bid is made without prior understanding agreement, or connection with any corporation, firm or person submitting a Bid for the same materials, supplies, or equipment, and is in all respects fair and with-out collusion or fraud. I agree to abide by all conditions of this Bid and the ITB. I certify that I am authorized to sign this Bid for the Bidder.		
	AUTHORIZED SIGNATURE (MANUAL)	
	AUTHORIZED SIGNATURE (TYPED) TITLE	

GENERAL CONDITIONS

SEALED BIDS: This form must be executed and submitted in a sealed envelope with the Bidder's Qualifications Package. Bids not submitted with this Bid form may be rejected**.**

1. **EXECUTION OF BID:** Each Bid must contain a manual signature of the Bidder's authorized representative in the space provided above.

2. **NO BID:** If not submitting a Bid, respond by returning this form, marking it "No Bid", and explain the reason in the space provided above. Repeated failure to quote, without sufficient justification, shall be cause for removal of the supplier's name from the Bid mailing list. Note: To qualify as a respondent, Bidder must submit a "No Bid" and it must be received no later than the stated Bid opening date and hour.

3. **BID OPENING:** Shall be at a public opening commencing at the time and date specified in the Solicitation. It is the Bidder's responsibility to assure that its Bid is delivered at the proper time and place of the Bid opening. Bids which for any reason are not so delivered will not be considered. Offers by telegram or telephone are not acceptable.

4. **PROOF OF CAPABILITY:** The Bidder may be required before the award of any contract, to show to the complete satisfaction of the City Council that it has the necessary facilities, ability and financial resources to perform the Bid requirements in compliance with the Agreement.

Form 10 . Bidder's Acknowledgment

(continued)

5. **PATENTS AND ROYALTIES:** The Bidder, without exception, shall indemnify and save harmless the City of Hialeah and its employees from liability of any nature or kind, including cost and expenses for or on account of any copyrighted, patented, or unpatented invention, process or article manufactured or used in the performance of the contract, including its use by the City of Hialeah, Florida. If the Bidder uses any design, device, or materials covered by letter, patent or copyright, it is mutually agreed and understood without exception that the Bid prices shall include all royalties or cost arising from the use of such design, device, or materials, in any way involved in the work.

6. **RATE OF WAGES:** When applicable, the rate of wages for work covered by a public contract for those employed by any contractor or subcontractor shall not be less that the prevailing rate of wages for similar skills or classifications or work in the City of Hialeah. The Division of Labor and Employment Opportunities, Tallahassee, Florida, will furnish the prevailing wage rates in the City of Hialeah, upon request.

7. **PRICES TERMS AND PAYMENT:** Firm prices shall be quoted; the prices shall be typed or printed in ink and shall include all charges, unless otherwise explicitly stipulated in the Agreement.

   (a) **TAXES:** A Bidder shall include all applicable taxes in its Bid. A Bidder will not be excused from payment of state sales or transportation taxes or other applicable taxes. A Bidder shall not base a Bid price on an assumption that that the City will utilize its tax exemption to purchase or order materials, equipment, etc. Any tax liability or tax payment resulting from any determination or interpretation of any law, rule, regulation or opinion is the sole responsibility of the Bidder.

   (b) **DISCOUNTS:** Bidders may offer a cash discount for prompt payment: however, such discounts shall not be considered in determining the highest net price for Bid evaluation purposes. Bidders are encouraged to reflect cash discounts in the prices quoted.

   (c) **MISTAKES:** Bidders are expected to examine the ITB, specifications, delivery schedule, Bid prices, and all instructions pertaining to supplies and/or services. Failure to do so will be at Bidder's risk.

   (d) **SAFETY STANDARDS:** All of Bidder's activities under the ITB shall comply with the applicable requirements of the Occupational Safety and Health Act and any standards thereunder.

8. **AWARDS:** As the best interest of the City may require, the City reserves its right to make award(s), or reject any and all Bids, or waive any minor informality or technicality in Bids received

9. **INFORMATION AND DESCRIPTIVE LITERATURE:** Bidders must furnish all information requested in the spaces provided on the Bid form. Each Bidder may submit with his Bid, descriptive literature and/or complete specifications covering the Bidder's facilities and equipment.

10. **INTERPRETATIONS:** Any questions concerning conditions and specifications shall be directed to the City, as provided in the Solicitation. Inquiries must reference the date of Bid opening and title. Failure to comply with this condition will result in Bidder waiving his right to dispute the Bid specifications.

11. **PRICE ADJUSTMENTS:** Any price decrease effectuated during the contract period either by reason of market change or on the part of the Contractor to other customers shall be passed on to the City of Hialeah.

12. **ADVERTISING:** In submitting a Bid, Bidder agrees not to use the results therefrom as a part of any commercial advertising.

13. **LIABILITY:** The Bidder shall hold and save the City of Hialeah, its officers, agents, and employees harmless from liability of any kind in the performance of any work or services as required under the ITB.

14. **EQUAL EMPLOYMENT OPPORTUNITY:** The City of Hialeah endorses Equal Employment and incorporates the non-discrimination clause in this Request for Bids.

Form 10. Bidder's Acknowledgment

(continued)

15. **SPECIFICATION SILENCE:** Apparent silence on the specifications as to any details, or the apparent omission from it of a detailed description concerning any point, shall be regarded as meaning only the best commercial practices will prevail and that only materials and workmanship of first quality are to be provided. All interpretations of the Specifications shall be made upon this statement.

THIS BID CONSTITUTES AN OFFER FROM THE BIDDER. THE BIDDER ACKNOWLEDGES THE CITY'S RELIANCE UPON ALL REPRESENTATIONS MADE BY BIDDER TO THE CITY IN CONNECTION WITH THIS SOLICATION TO BE REASONABLE AND ANY MATERIAL MISREPRESENTATION BY BIDDER WILL BE DETRIMENTAL TO THE CITY. UPON ACCEPTANCE BY THE CITY OF ANY OR ALL PARTS OF THIS BID, THE BIDDER ACKNOWLEDGES THAT IT WILL BE BOUND BY THE TERMS OF THE SOLICITATION, AS AMENDED, AND THIS BID, WHICH SHALL CONSTITUTE THE PARTIES AGREEMENT, TO PERFORM THE SERVICES SOLICTED.

_____
(signature)

Sworn to and subscribed before me this_____day of_____, 2018.

Personally known _____

OR Produced Identification_____

_____
(Type of identification)

_____

Notary Public - State of _____

_____
(Printed typed or stamped
commissioned name of notary public)

Form 11. City of Hialeah Disclosure Affidavit

PURCHASING DIVISION
CITY OF HIALEAH DISCLOSURE AFFIDAVIT

I_____being first duly sworn, state:

The full legal name and business address* of the Person or entity contracting or transacting business with the City of Hialeah are:

_____

_____

_____

Phone Number:_____Fax Number: _____

If the contract or business transaction is with a corporation, the full legal name and business address* shall be provided for each officer and director and each stockholder who holds directly or indirectly five percent (5%) or more of the corporation's stock. If the contract or business transaction is with a partnership, the full legal name and business address* shall be provided for each partner. If the contract or business transaction is with a trust, the full legal name and address* shall be provided for each trustee and each beneficiary. All such names and addresses are:

_____

_____

_____

The full legal names and business addresses* of every other individual (other than subcontractors, material men, suppliers, laborers, or lenders) who have, or will have, any interest (legal, equitable, beneficial or otherwise) in the contract or business transaction with the City of Hialeah are:

_____

_____

Bidder's Tax ID Number (F.E.I.N) or Social Security Number:_____- _____

PROOF OF CORPORATE STATUS

Please provide proof of corporate status. Each corporate Bidder must demonstrate it is an active corporation in good standing in the State of Florida or any other State. If incorporated in a state other than Florida, then please provide proof that the corporation is registered to do business in the State of Florida in addition to proof of active corporate status. If incorporated in Florida, a computer print-out from the Department of State will be sufficient proof of corporate status. Proof of good standing also is required for all partnerships, limited partnerships, joint-ventures, etc.

_____ _____
LEGAL SIGNATURE OF AFFIANT (Print or Type Legal Name of Affiant)

Sworn to and subscribed before me this_____day of_____, _____

Notary Public - State of: _____

My Commission Expires: _____

_____
Print/Type and Stamp commissioned name of Notary Public **NOTARY SEAL**

Personally known or Produced Identification __
Type of Identification Produced _____
****Post office box addresses are not acceptable.**

Form 12. Assignment of Antitrust Claims

For, and in recognition of, good and valuable consideration, receipt of which is hereby acknowledged,

_____,
Company Name

acting herein by and through _____,
Individual Name

its_____and duly authorized agent,
Title of Individual's Position

hereby conveys, sells, assigns and transfers to the City of Hialeah, Florida, all rights, title and interest in and to all causes of action it may now or hereafter acquire under the antitrust laws of the United States and the State of Florida for price fixing, relating to the particular goods or services purchased or acquired by the City of Hialeah, Florida pursuant to this City's ITB NO.

_____ _____ Date
Name

_____
Signature

_____
Title

_____
Name of Company

_____
(signature)

Sworn to and subscribed before me this_____day of_____, 2018.

Personally known _____ _____

OR Produced Identification_____ Notary Public - State of _____

_____ _____
(Type of identification) (Printed typed or stamped commissioned name of notary public)

Form 13. Bid Bond

STATE OF FLORIDA }
COUNTY OF MIAMI DADE }SS.
CITY OF HIALEAH }

KNOWN ALL MEN BY THESE PRESENTS, That we _____ _____as Principal, and_____, as Surety, are held and firmly bonded unto the City of Hialeah as Owner in the penal sum of_____ _____Dollars ($_____), lawful money of the United States, for the payment of which sum well and truly to be made, we bind ourselves, our heirs, executors, administrators, and successors, jointly and severally, firmly by these presents.

THE CONDITION OF THIS OBLIGATION IS SUCH that whereas the Principal has submitted to the City of Hialeah the accompanying Bid, signed

_____ , and dated_____,2018, for

ITB – Pump Station 12 - Upgrades

CITY OF HIALEAH, FLORIDA

in accordance with the Plans and Specifications therefore, the call for Bids, and the Instructions to Bidders, all of which are made a part hereof by reference as if fully set forth herein.

NOW, THEREFORE,

(a) if the Principal shall not withdraw said bid within one hundred eighty (180) days after date of submittal of the same, and shall within ten (10) days after written notice being given by the City Mayor or his designee, of the award of the contract, enter into a written contract with the City, in accordance with the bid as accepted, and give bond with good and sufficient surety or sureties, as may be required for the faithful performance and proper fulfillment of such contract.

(b) in the event of the withdrawal of said bid within the period specified, or the failure to enter into such contract and give such bond within the time specified, if the Principal shall pay the City the difference between the amount specified in said bid and the amount for which the City may procure the required work and/or supplies, if the latter amount be in excess of the former, the above obligation shall be void and of no effect, otherwise to remain in full force and effect.

IN WITNESS HEREOF, the above bounded parties have executed this instrument under their several seals this_____day of _____, A.D., 20_____, the name and corporate seal of each corporate party being hereto affixed and these presents duly signed by its undersigned representative, pursuant to authority of its governing body.

WITNESS
(If Sole Ownership or Partnership, two (2) Witnesses Required.
If Corporation, Secretary Only will Attest and affix seal).

(1) _____

(2) _____

PRINCIPAL

_____(SEAL)
Name of Firm

_____
Signature of Authorized Officer

_____
Title

_____
Business Address

_____
City, State

WITNESS:

SURETY:

(1) _____

Attorney-In-Fact

(2) _____

Business Address

SURETY:

_____
Attorney-In-Fact

_____
Business Address

_____
City, State

_____
Name of Local Agency

C

Form 14. Contractor's Performance and Payment Bond (Surety)

STATE OF FLORIDA}
COUNTY OF MIAMI DADE}
CITY OF HIALEAH}

KNOW ALL MEN BY THESE PRESENTS THAT_____

_____

_____ as Principal, and

_____

_____a corporation organized under the Laws of the State of_____with its home office in the City of_____as Surety, (said Principal and said Surety hereinafter collectively being referred to as Obligor), are held and firmly bound unto the City of Hialeah, a municipal corporation of Florida, acting by and through the HIALEAH CITY COUNCIL, and their successors, in office, hereinafter called the Obligee, in the sum of $_____ lawful money of the United States of America, for the payment whereof to the Obligee, the Principal and Surety respectively bind themselves, their successors, heirs, and assigns, jointly and severally, firmly by these presents.

Signed, sealed and dated this_____day of_____, 2018,

WHEREAS the Principal and Obligee are entering into a written contract, hereinafter called the Contract for

_____ as evidenced by

Contract Plans and Specifications made a part thereof and entered into between the Principal and the Obligee on the *_____ day of _____, 2018, a copy of which Contract may be attached and is hereby referred to and made a part thereof.

- To be dated by the City of Hialeah, Obligee.

NOW THEREFORE, the condition of the foregoing obligation is such that if the Principal shall indemnify the Obligee for all loss that the Obligee may sustain by reason of the Principal's failure to comply with any of the terms of the Contract, then this obligation shall be void; otherwise it shall remain in full force.

THIS BOND shall also be security for the performance by the Principal and Surety of the following additional covenants and obligations, and the recitals and references herein contained shall constitute a part of this Bond and obligation:

1. Said Principal (Contractor) shall well and truly perform, carry out, and abide by all the terms, conditions and provisions of said contract and building complete the structures therein specified in accordance with the terms thereof, and the Obligor herein shall and does hereby agree to indemnify the Obligee and hold it harmless or, from and against any and all liability, loss, cost, damage or expense thereof by reason of any negligence, default, and/or misconduct on the part of the said Contractor and_____agents, servants, and/or employees, in, about, or on account of the construction of said Contract by the said Contractor, and shall repay to and reimburse to the Obligee promptly upon demand, all sums of money, each and every, reasonably paid out or expended by the said Obligee on account of the failure and/or refusal of said Contractor to carry out , do, perform, and /or comply with any of the terms and provisions of said Contract at the time and in the manner therein provided.

2. The Principal will make payments to all persons supplying the Principal, labor, materials, and supplies used directly or indirectly by the Principal or any subcontractors) of the Principal in the prosecution of the work provided for in said Contract.

3. Each and every person, natural and artificial, for whose benefit this Bond has been executed as disclosed by the test of this Bond, and of said Contract, specifications, drawings and all papers, and of said agreement and instruments attached and made a part of said Contract, and each and every person, natural or artificial, supplying labor, materials, or supplies in furtherance of said Contract, shall have the same several rights of suit or action upon this Bond as if he or they were the Obligee(s) herein specifically mentioned, and the obligations hereof shall be several as to the rights of said persons or said Obligees hereof.

4. In each and every suit brought against the Obligor upon this Bond in which the plaintiff shall be successful, there shall be assessed therein against the Obligor herein, in favor of the plaintiff therein, reasonable counsel fees, which the Obligor hereby expressly agrees to pay as part of the cost and expense of such suit.

IN WITNESS WHEREOF the said Principal and said Surety hereto have caused these presents to be executed this_____day of_____, 2018

APPROVED AS TO FORM:

_____

City Attorney

Contractors Performance and Payment Bond (Surety)

WHEN THE PRINCIPAL IS AN INDIVIDUAL:

Signed, sealed and delivered in the presence of:

_____	_____ (SEAL)
(Witness)	(Signature of Individual)
_____	_____
(Witness)	(Printed Name of Individual)

WHEN THE PRINCIPAL IS A SOLE PROPRIETORSHIP OR OPERATES UNDER A TRADE NAME:

Signed, sealed and delivered in the presence of:

_____	_____
(Witness)	(Name of Firm)
_____	_____
(Witness)	(Signature of Individual)

WHEN THE PRINCIPAL IS A PARTNERSHIP:

Signed, sealed and delivered in the presence of:

	_____
_____	_____
	(Name of Firm) A Partnership
_____	BY_____
	Partner

WHEN THE PRINCIPAL IS A CORPORATION:

ATTEST:

_____ _____

Correct Name of Corporation

By_____

President

_____

(Corporate Seal)

_____

(Name of Surety)

_____

_____

(Address of Surety)

By _____

_____

NOTE: If both Principal and Surety are Corporations, the respective corporate seals should be affixed and attached.

CERTIFICATES AS TO CORPORATE PRINCIPAL

I,_____, certify that I am the secretary of the Corporation named as Principal in the within

Bond; that_____, who signed the said Bond on behalf of the

Principal, was then_____of said Corporation; that I know his signature, and his

signature thereto is genuine; and that said Bond was duly signed, sealed and attested for and in behalf of said

Corporation by authority of its governing body.

(Corporate Seal)

_____

STATE OF FLORIDA}
COUNTY OF MIAMI DADE}
CITY OF HIALEAH}

Before me, a Notary Public duly commissioned, qualified and acting, personally, appeared;

_____

_____

to me well known, who being by me first duly sworn upon oath says that he is the attorney-in- fact for the__and that he has been authorized by_____ to execute the foregoing Bond on behalf of the Contractor named therein in favor of the City of Hialeah, a municipal Corporation of Florida.
Subscribed and sworn to before me this_____day of_____, A.D.,20_____

_____

Notary Public State of Florida at Large My

Commission Expire

Form 15. Contractor's Performance and Payment Bond (Cash)

KNOW ALL MEN BY THESE PRESENTS THAT _____

_____

_____
hereinafter, called the contractor, is held and firmly bound unto CITY OF HIALEAH, a municipal corporation of Florida, hereinafter called the City, in the penal sum of $_____ which sum is deposited by the contractor in cash with the Finance Director of the City, for (1) the faithful performance of a certain written agreement dated_____,

2017, given by the contractor to the City, for the construction of_____

_____

_____
copy of which agreement is attached and by this reference made a part hereof, and (2) to pay promptly all persons supplying the contractor labor, material and supplies used directly or indirectly by the contractor or subcontractors, in the prosecution of the work provided for in said agreement.

NOW, THEREFORE, the conditions of the obligation are such that if the contractor shall comply in all respects with the terms and conditions of said agreement within the times therein specified, and shall pay promptly all persons as herein above stipulated, this obligation shall be void and the sum deposited shall be returned without interest to the contractor by the Finance Director; otherwise this obligation shall remain in full force, and the contractor, its heirs, executors, administrators, successors and assigns do hereby irrevocably authorize the Finance Director, without prior notice or demand to:

1. Transfer a sum equal to any amounts stipulated as liquidated damages for delay from the said deposit to the general fund of the City;

2. Pursuant to public advertisement and receipt and acceptance of bids, cause to be completed or reconstructed all or any part of the said construction or improvement, in case the Contractor should fail or refuse so to do in accordance with terms of said agreement and to pay for such construction or reconstruction from the said deposit;

3. Pay from said deposit, all just claims for labor and material incurred by the Contractor or any subcontractor for labor, materials or supplies used in prosecution of the work provided for in said Contract, and any judgments together with interest, costs and attorneys' fees entered under the provisions of Section 255.05 F.S., and

4. Pay from said deposit to the general fund of the City any and all other costs to the City, including, but not limited to, engineering, legal and contingent costs, together with any damages, either direct or consequential which the City may sustain on account of the failure of the Contractor to carry out and execute all the provisions of said agreement.

The penal sum herein above stipulated and deposited is not a limitation upon the liability of the Contractor to the City. In the event the City prosecutes to judgment against the Contractor any action brought against it by the Contractor, the Contractor agrees to pay to City the reasonable value of legal services there rendered by counsel for the City.

IN WITNESS WHEREOF the Contractor has executed under seal and delivered to City these presents this_____day of_____, 20_____

Approved as to form:

_____

City Attorney

WHEN THE PRINCIPAL IS AN INDIVIDUAL:
Signed, sealed and delivered in the presence of:

_____ (SEAL)
(Witness) (Signature of Individual)

_____ _____
(Witness) (Printed Name of Individual)

WHEN THE PRINCIPAL IS A SOLE PROPRIETORSHIP OR OPERATES UNDER A TRADE NAME:
Signed, sealed and delivered in the presence of:

_____ _____
(Witness) (Name of Firm)

_____ _____
(Witness) (Signature of Individual)

WHEN THE PRINCIPAL IS A PARTNERSHIP:
Signed, sealed and delivered in the presence of:

_____

_____ _____
(Name of Firm) A Partnership

_____ BY_____
Partner

WHEN THE PRINCIPAL IS A CORPORATION: ATTEST:

_____
Correct Name of Corporation

_____ BY _____

_____
(Secretary)

President _____
(Corporate Seal)

CORPORATE CERTIFICATE

1, _____ ___

certify that I am the_____Secretary_____of

the corporation named in the within bond; that_____

_____

who signed the said bond on behalf of the contractor, was then_____ of

said corporation; that I know his signature, and his signature thereto is genuine; and that said bond was

duly signed, sealed and attested for and in behalf of said corporation by its governing body.

_____ President

(Corporate Seal)

Form 16. Release of Lien

KNOW ALL MEN BY THESE PRESENTS:

That the undersigned, for and in consideration of the payment of the sum of……and

……/100 Dollars ($_____ _____) paid by

the …… receipt of which is

hereby acknowledged, hereby releases and quit claims to the said

……its successors and assigns, and

……the Owner, all liens, lien rights,

claims or demands of any kind whatsoever, which the undersigned now has or might have against the building on premises legally described as ……

……

……

……on account of labor performed and/ or

Material furnished for the construction of any improvements thereon. That all labor and materials used by the undersigned in the erection of said improvements have been fully paid for.

IN WITNESS WHEREOF, have hereunto set my hand seal this

……day of…… 20……

WITNESSES: …… (SEAL)

By ……

STATE OF FLORIDA}

COUNTY OF MIAMI DADE}

CITY OF HIALEAH}

I hereby acknowledge that the statements contained in the foregoing Release of Lien are true and correct.

Sworn to and subscribed before me this ……day of……20……

My Commission Expires:

Notary Public State of Florida at Large

Appendix A

BID SUBMITTAL FORM:
Pump Station 12 Upgrades
ITB NO.: 2018-19-9500-00-012

FEIN NO.: ____/____-____ / ____ / ____ / ____ / ____ / ____ / ____
(Bidder's Federal Employer Identification Number) If none, Bidder's Social Security Number

---

The undersigned Bidder certifies that this bid is submitted in accordance with the bid specifications and conditions governing this bid, and that the Bidder will accept any award(s) made to him as a result of this bid.

FIRM NAME: _____

STREET ADDRESS: _____

CITY/STATE/ZIP CODE: _____

TELEPHONE NO.:_____**FAX NO.:** _____

E-MAIL: _____

AUTHORIZED SIGNATURE_____**Date** _____
PERSON AUTHORIZED TO ENTER INTO CONTRACTUAL AGREEMENT

PRINT NAME OF BIDDER'S REPRESENTATIVE_____

TITLE OF BIDDER'SREPRESENTATIVE_____

THE EXECUTION OF THIS FORM CONSTITUTES THE UNEQUIVOCAL OFFER OF BIDER TO BE BOUND BY THE TERMS OF ITS BID. FAILURE TO SIGN THIS SOLICITATION WHERE INDICATED ABOVE BY AN AUTHORIZED REPRESENTATIVE SHALL RENDER THE BID NON-RESPONSIVE. THE CITY MAY, HOWEVER, IN ITS SOLE DISCRETION, ACCEPT ANY BID THAT INCLUDES AN EXECUTED DOCUMENT WHICH UNEQUIVOCALLY BINDS THE BIDDER TO THE TERMS OF ITS OFFER.

_____
(signature)

Sworn to and subscribed before me this_____day of_____, 2018.

Personally known _____ _____

OR Produced Identification_____ Notary Public - State of _____

_____ _____
(Type of identification) (Printed typed or stamped commissioned name of notary publ

Appendix B

BID SUBMITTAL CHECKLIST

This checklist is provided for Bidder's convenience only. It identifies the sections of this submittal document that must be completed and submitted with each response. Any Bid that fails to include one or more of these sections may be rejected as being non- responsive. Please be advised that this checklist may not necessarily include all of the requirements listed in this Solicitation. This checklist sets guidelines for consideration, and may be added to as the need arises.

Bidder's Name:_____

QUALIFICATIONS PACKAGE		
	Appendix A – Bid Submittal Form	
	Appendix B – Submittal Checklist	
	1 Bidder's Statement of Organization	
	2 Subcontractors	
	3 Insurance Requirements	
	4 Insurance Check List	
	5 Public Entity Crimes Affidavit	
	6 Non-Collusion Affidavit	
	7 Drug-Free Workplace	
	8 Acknowledgment of Addenda	
	9 Certification to Accuracy of Bid	
	10 Bidder's Acknowledgment	
	11 City of Hialeah Disclosure Affidavit	
	12 Assignment of Antitrust Claims	
	13 Bid Bond	
	14 Contractor's Performance and Payment Bond	
	15 Contractor's Performance and Payment Bond Cash	
	16 Release of Lien	

Tab/Page No.	COST PACKAGE	OFFICE USE ONLY
	Section 1 - Bid P r i c e Form	

FOR PURCHASING OFFICE USE ONLY

Responsive Non-Responsive Other: _____

Comment: _____

SECTION 01010 - SUMMARY OF WORK

PART 1 – GENERAL

1.01 GENERAL

A. The work to be performed under this Contract shall consist of furnishing all equipment, materials, supplies, and manufactured articles and for furnishing all transportation and services, including fuel, power, water, and essential communications, and for the performance of all labor, work, or other operations required for the fulfillment of the Contract in strict accordance with the Contract Documents. The work shall be complete, and all work, materials, and services not expressly shown or called for in the Contract Documents which may be necessary for the complete and proper construction of the work in good faith shall be performed, furnished, and installed by the CONTRACTOR as though originally so specified or shown, at no increase in cost to the CITY.

B. Wherever the Contract Documents address a third party, i.e., SUBCONTRACTOR, manufacturer, etc., it is to be considered as the CONTRACTOR through the third party.

C. Wherever a reference to number of days is noted, it shall be construed to mean calendar days.

1.02 WORK COVERED BY CONTRACT DOCUMENTS

A. The work of the Contract comprises of upgrades to Pump Station 12 including, but not necessarily limited to demolition of existing facilities, removal and replacement of existing top slab, core drilling, valve box construction, pipeline installations, sheeting and shoring (if required), installation of pumping units/discharge piping; control panel, landscaping, fencing and site restoration.

B. The work set forth within these bid documents includes the furnishing of all labor, materials, equipment, services and incidentals for the upgrades to Pump Station 12 including all items listed above as well as yard utilities, instrumentation and electrical systems and all appurtenant work, complete, tested and ready for operation, including temporary utilities and facilities as required, all in conformance with the Contract Documents.

C. Pump Station 12 is located at 3511 East 9th Lane, Hialeah, FL.

1.03 SEQUENCE OF CONSTRUCTION

A. Following receipt of Notice to proceed with the work, the CONTRACTOR shall notify the ENGINEER and the CITY at least ten days before he is ready to start actual construction to allow the CITY time to make arrangements for inspection of the work.

B. Work under the Contract shall be scheduled and performed in such a manner as to result in the least possible disruption to the operation of the existing facilities. Any control modifications to the existing facilities shall not be made without first obtaining written permission from the ENGINEER and the CITY.

C. Critical events in the sequence of construction are specified herein. The outline sequence of construction does not include all items necessary to complete the work, but is intended to identify the sequence of critical events necessary to minimize disruption to the ongoing operation. It shall be understood by the CONTRACTOR that the critical events identified are not all inclusive and that additional items of work not stated may be required. The sequence of construction is a precedence requirement and does not attempt to schedule the CONTRACTOR'S work. It is intended only to indicate which activities must precede other activities in order to minimize interference and disruptions.

D. The existing facilities shall be maintained in an operable condition by the CONTRACTOR during construction (excluded from this requirement are all normal and emergency maintenance functions normally performed by the CITY with the CITY's staff or by Contract.) All work by the CONTRACTOR that disrupts the normal operations shall be shown on the Construction Schedule and specifically scheduled with the CITY. Schedule notification shall consist of a written notice defining the work to be accomplished, the function that will be interrupted, the duration of the interruption, and the mitigating effort to be performed by the CONTRACTOR to maintain the pumping capacity continuously. The written notice shall be submitted to the ENGINEER 14 days in advance of the proposed work and the ENGINEER will respond to the CONTRACTOR in writing within 7 days of receipt of the notice regarding the acceptability of the proposed plan.

E. In performing the work in the sequence described hereinafter, all requirements of the Contract Documents shall be strictly followed. **VALVES BETWEEN THE EXISTING AND NEW WORK SHALL BE OPERATED BY CITY PERSONNEL. UNDER NO CIRCUMSTANCES SHALL THE CONTRACTOR'S PERSONNEL OPERATE ANY SUCH GATE OR VALVE.**

F. Temporary installation/connections may be used where sufficient time is not available to complete a particular aspect of the work. All such subject temporary installations shall be subject to review and acceptance by the ENGINEER.

G. The CONTRACTOR shall note that many areas of the work require the CONTRACTOR to work on existing pipelines and structures which will require wastewater dewatering. In the cases of wet wells the CONTRACTOR will, as possible, dewater the structure, hose wash down the basin and shovel clear the contents (settled materials) to the extent possible. In the case of pipelines, the CONTRACTOR shall be responsible for the proper containment and disposal of wastewater drained from existing pipelines during construction. The CONTRACTOR shall contain such wastewater (in accordance with all applicable codes) and shall dispose of such to an off-site wastewater basin as directed by the ENGINEER. The CONTRACTOR shall be responsible for the prevention of wastewater spills within the realm of his work areas.

H. Cancellation of Planned Shutdown: A planned shutdown in accordance with the above described procedures may be canceled by the CITY upon 24-hour notification by the CITY/ENGINEER to the CONTRACTOR. Such cancellation shall be expected due to wet weather conditions or other conditions beyond the control of the CITY, ENGINEER or CONTRACTOR. All efforts shall be taken to check weather forecasts and the like prior to scheduling pump station shutdowns. However, if a cancellation must occur, the CITY shall not be responsible for any additional costs associated with mobilization and demobilization.

I. The sequence has been divided into phases and subsequent steps representing major work areas. The CONTRACTOR is advised that in some instances activities identified in one phase will continue through the next phase and that certain phases may proceed simultaneously.

J. The general sequence of construction shall be as follows, but a detailed Sequence of Construction shall be submitted by the CONTRACTOR before any work is started. The CITY reserves the right to make changes to the sequence as necessary to facilitate the work or to minimize any conflict with pump station operations and other contractors.

PHASE I - MOBILIZATION

Step 1 - Mobilize for work. Set up storage, staging and parking areas. Obtain permits, develop and submit construction schedule and start shop drawing submittal.

Step 2 - Call for locates (Sunshine 811) and document all location marks in the field.

Step 3 - CONTRACTOR shall immediately open a dialog with Florida Power and Light to ensure proper coordination to obtain both temporary and final station electrical service. Failure to do so may result in delays for which the CONTRACTOR may be liable for.

Step 4 - CONTRACTOR shall immediately open a dialog with all existing utilities in the project area. CONTRACTOR shall coordinate and determine if utility relocations are required. CONTRACTOR shall notify ENGINEER of utility relocation requirements and costs. Utility relocations shall be reimbursed under a dedicated allowance account (see 01025). Failure properly coordinate any required utility relocations may result in delays for which the CONTRACTOR may be liable for.

Step 5 -Verify locations, elevations, dimensions, type of joints, manufacturer of pipes, equipment, etc., before ordering materials to complete the work in accordance with the Contract Documents, Shop Drawings and field conditions.

Step 6 -Upon approval of shop drawings, order long lead items so that materials may be delivered in a timely fashion without delays to construction.

PHASE II – BY-PASS INSTALLATION

Step 1 -Submit by-pass pump plan for CITY/ENGINEER approval prior to making all the necessary connections and startup of bypass pump operation. The primary by-pass pumps must be electrical powered and the operation must provide one hundred percent capacity to ensure continuous and uninterrupted pump station service. Additionally, one hundred percent standby pumping capacity must be ready for immediate activation should the duty pump fail. The standby pumping units shall be a diesel or electrical with generator back up. Both units shall be sound attenuated to minimize noise. Pumping units shall be designed for continuous operation. Pumps shall be capable of running dry for extended periods of time.

Please note, should the CONTRACTOR fail to obtain temporary electric service in a timely manner to power the bypass system, the CONTRACTOR shall be required to provide a diesel-diesel redundant bypass system at no additional cost to the OWNER. A

timely manner is considered within a period of time that will not impact the project's critical path and result in the contract completion date to be missed.

Step 2 -Install bypass piping and pumping units. Provide enclosures to reduce noise generated by bypass pumping units.

Step 3 -Install bypass suction piping to pump station influent manhole and bypass discharge piping to pump station force main.

Step 4 -Contact CITY personnel and arrange system shutdown upstream of the pump station for plug installation and force main shut down for tie in operations.

Step 5 -Plug influent line to existing wet well.

Step 6 -Make force main connection.

Step 7 -Place bypass system into operation. Bypass system shall be operational for 48-hour period prior to dismantling existing station. Acceptance shall be given by CITY. Any failure of bypass system to meet specified pumping requirements will involve the re-testing of the units at the CONTRACTOR'S expense. CONTRACTOR shall provide 24-hour by-pass system monitoring to ensure continuous and uninterrupted pump station service for the duration of the project.

PHASE III – DEMOLITION OF EXISTING STATION

Step 1-Upon approval and commissioning of the by-pass system, the CONTRACTOR shall commence with the demolition of the existing structure.

Step 2-All equipment, valves, piping, fitting, pumps, instrumentation and electrical components are the property of the CITY until released. As such, care shall be taken when removing these items. All items tagged by the CITY shall be delivered to a site defined by the CITY. All items not tagged to by the CITY shall remain the property of the CONTRACTOR and shall be disposed of in compliance with local and state requirements.

Step 3-The CONTRACTOR shall wet down demolished material as necessary to limit dust.

Step 4-Once demolition is complete, the CONTRACTOR shall prepare interior surfaces as required for coating application per contract requirements.

PHASE IV – VALVE BOX AND STATION TOP SLAB

Step 1 –Excavate as required to install the valve vault box. Install specified back fill and compact as required.

Step 2 – Set valve box, install piping, seal openings, etc.

Step 3 –Coat interior/ exterior of structures as specified.

Step 4 -Install underground piping as necessary and make connections to various structures. Back fill and compact as required.

Step 5 -Install valve box piping, valving and fittings. Pressure test piping as required by the contract documents.

Step 6 –Construct associated pipe supports and restraints. Paint discharge piping.

Step 7 -Set top slab for Pump Station and valve vault.

Step 8 -Upon curing for the required time, prep underside of slab for coating installation. Apply coating to wet well walls floor and ceiling as specified in the contract documents.

PHASE V – PUMP/ ELECTRICAL/ INSTRUMENTATION INSTALLATION

Step 1 –Set pumps within wet well and secure to floor per manufacturer requirements.

Step 2 –Install associate discharge piping, guide rails and supports.

Step 3 –Install all conduits and miscellaneous piping as necessary for electrical/ instrumentation requirements.

Step 4 -Install all electrical panels as required.

Step 5 -Pull all wiring and make required terminations to associated equipment.

PHASE VI - TESTING AND STARTUP

Step 1 -Fill wet well with potable water from fire hydrant, water is required to be metered and paid for accordingly.

Step 2 -Perform all testing, startup, training and place station into service.

Step 3 -At the conclusion of 7 days of successful operation, the by-pass system may be removed upon written approval by the CITY. Upon removal of underground by-pass piping, the CONTRACTOR shall back fill and compact the associated excavations.

PHASE VII - FINAL SITE WORK AND PROJECT CLOSEOUT

Step 1 -Repair damaged roadway as required.

Step 2 -Repair damaged sidewalk and curbing as required. Install sod.

Step 3 - Miscellaneous work, demobilization and related closeout activities shall be in accordance with Section 01700, "Project Closeout".

1.04 CONSTRUCTION PERMITS

A. The CONTRACTOR shall obtain, keep current and pay all fees for any necessary construction permits from those authorities, agencies, or municipalities having jurisdiction over land areas, utilities, or structures which are located within the Contract limits and which will be occupied, encountered, used, or temporarily interrupted by the CONTRACTOR'S operations unless otherwise stated. Record copies of all permits shall be furnished to the ENGINEER.

B. When construction permits are accompanied by regulations or requirements issued by a particular authority, agency or municipality, it shall be the CONTRACTOR'S responsibility to familiarize himself and comply with such regulations or requirements as they apply to his operations on this Project.

C. It shall be the CONTRACTOR'S responsibility to secure all permits of every description required to initiate and complete the work under this contract, except permits obtained by the CITY.

D. Permits obtained by the CITY or his authorized representative, include the following: Department of Environmental Resource Management (DERM), City of Hialeah Building and Zoning (Dry Run).

E. No separate or direct payment will be made to the CONTRACTOR for permits and inspection requirements, but all such costs shall be included in the applicable items in the Schedule of Prices. The CITY will furnish signed and sealed sets of Contract Documents for permit use as required.

F. The CONTRACTOR shall furnish to the ENGINEER copies of all permits prior to commencement of work requiring permits.

1.05 ADDITIONAL ENGINEERING SERVICES

A. In the event that the ENGINEER is required to provide additional engineering services as a result of substitution of materials or equipment which are not "or equal" by the CONTRACTOR, or changes by the CONTRACTOR in dimension, weight, power requirements, etc., of the equipment and accessories furnished, or if the ENGINEER is required to examine and evaluate any changes proposed by the CONTRACTOR for the convenience of the CONTRACTOR, then the ENGINEER's charges in connection with such additional services shall be charged to the CONTRACTOR by the OWNER.

B. Structural design shown on the Contract Drawings is based upon typical weights for major items of equipment as indicated on the Contract Drawings and specified. If the equipment furnished exceeds the weights of said equipment, the CONTRACTOR shall assume the responsibility for all costs of redesign and for any construction changes required to accommodate the equipment furnished, including the ENGINEER's expenses in connection therewith.

C. In the event that the ENGINEER is required to provide additional engineering services as a result of CONTRACTOR'S errors, omissions, or failure to conform to the requirements of the Contract Documents, or if the ENGINEER is required to examine and evaluate any changes proposed by the CONTRACTOR solely for the convenience of the CONTRACTOR, then the ENGINEER'S charges in connection with such additional services shall be charged to the CONTRACTOR by the OWNER.

1.06 ADDITIONAL OWNER'S EXPENSES

A. In the event the work of this Contract is not completed within the time set forth in the Contract or within the time to which such completion may have been extended in accordance with the Contract Documents, the additional engineering or inspection charges incurred by the OWNER may be charged to the CONTRACTOR and deducted

from the monies due him. Extra work or supplemental Contract work added to the original Contract, as well as extenuating circumstances beyond the control of the CONTRACTOR, will be given due consideration by the OWNER before assessing engineering and inspection charges against the CONTRACTOR.

B. Unless otherwise specifically permitted, the normal time of work under this Contract is limited to 8 hours per day, Monday through Friday. Work beyond these hours will result in additional expense to the OWNER. Any expenses and/or damages, including the cost of the ENGINEER's on site personnel, arising from the CONTRACTOR'S operations beyond the hours and days specified above shall be borne by the CONTRACTOR.

C. Charges for additional CITY's expenses shall be in addition to any liquidated damages assessed in accordance with the Contract.

1.07 TIME OF WORK

A. The normal time of work for this Contract is limited to 40 hours per week and shall be between the hours of 7:30 a.m. and 3:30 p.m., Monday through Friday. The CONTRACTOR may elect, with prior CITY approval, to work beyond these hours or on weekends provided that all costs incurred by the OWNER for additional engineering shall be borne by the CONTRACTOR. The OWNER shall deduct the cost of additional engineering costs from monies due the CONTRACTOR.

B. Bypass pump operation / monitoring is required 24-hours, seven days per week and shall be performed by the CONTRACTOR.

C. If it shall become imperative to perform work at night, the OWNER and ENGINEER shall be informed a reasonable time in advance of the beginning of such work. Temporary lighting and all other necessary facilities for performing and inspecting the work shall be provided and maintained by the CONTRACTOR.

D. Unless otherwise specifically permitted, all work that would be subject to damage shall be stopped during inclement or stormy weather. Only such work as will not suffer injury to workmanship or materials will be permitted. CONTRACTOR shall carefully protect his work against damage or injury from the weather.

1.08 FIRE PROTECTION

A. CONTRACTOR shall take all necessary precautions to prevent fires at or adjacent to the work, buildings, etc., and shall provide adequate facilities for extinguishing fires which do occur.

B. When fire or explosion hazards are created in the vicinity of the work as a result of the locations of fuel tanks, or similar hazardous utilities or devices, the CONTRACTOR shall immediately alert the local Fire Marshal, the ENGINEER, and the OWNER of such tank or device. The CONTRACTOR shall exercise all safety precautions and shall comply with all instructions issued by the Fire Marshal and shall cooperate with the OWNER of the tank or device to prevent the occurrence of fire or explosion.

1.09 CHEMICALS

A. All chemicals used during project construction or furnished for project operation, whether herbicide, pesticide or disinfectant of other classification, must show approval of either the EPA or USDA. Use of all such chemicals and disposal of residues shall be in strict conformance with all applicable rules and regulations.

1.10 FIRST AID FACILITIES AND ACCIDENTS

A. First Aid Facilities

1. The CONTRACTOR shall provide at the site such equipment and facilities as are necessary to supply first aid to any of his personnel who may be injured in connection with the work.

B. Accidents

1. The CONTRACTOR shall promptly report, in writing, to the ENGINEER and OWNER all accidents whatsoever out of, or in connection with, the performance of the work, whether on or adjacent to the site, which cause death, personal injury or property damage, giving full details and statements of witnesses.

2. If death, serious injuries, or serious damages are caused, the accident shall be reported immediately by telephone or messenger to both the OWNER and the ENGINEER.

3. If any claim is made by anyone against the CONTRACTOR or a SUBCONTRACTOR on account of any accidents, the CONTRACTOR shall promptly report the facts, in writing, to the ENGINEER and OWNER, giving full details of the claim.

1.11 SURVEYS AND LAYOUT

A. All work under this Contract shall be constructed in accordance with the lines and grades shown on the Drawings or as directed by the ENGINEER. Elevation of existing ground and appurtenances are believed to be reasonably correct but are not guaranteed to be absolute and therefore are presented only as an approximation. Any error or apparent discrepancy in the data shown or omissions of data required for accurately accomplishing the stake out survey shall be referred immediately to the ENGINEER for interpretation or correction.

B. All survey work for construction control purposes shall be made by the CONTRACTOR at his expense. The CONTRACTOR shall provide a Licensed Surveyor as Chief of Party, competently qualified persons, all necessary instruments, stakes, and other material to perform the work.

C. CONTRACTOR shall establish all baselines for the location of the principal component parts of the work together with a suitable number of benchmarks and batter boards adjacent to the work. Based upon the information provided by the Contract Drawings, the CONTRACTOR shall develop and make all detail surveys necessary for construction, including slope stakes, batter boards, stakes for all working points, lines and elevations.

D. CONTRACTOR shall have the responsibility to carefully preserve the bench marks, reference points and stakes, and in the case of destruction thereof by the CONTRACTOR or resulting from his negligence, the CONTRACTOR shall be charged with the expense and damage resulting therefrom and shall be responsible for any mistakes that may be caused by the unnecessary loss or disturbance of such bench marks, reference points and stakes.

E. Existing or new control points, property markers and monuments that will be or are destroyed during the normal causes of construction shall be reestablished by the CONTRACTOR and all reference ties recorded therefore shall be furnished to the ENGINEER. All computations necessary to establish the exact position of the work shall be made and preserved by the CONTRACTOR.

F. The ENGINEER may check all or any portion of the work and the CONTRACTOR shall afford all necessary assistance to the ENGINEER in carrying out such checks. Any necessary corrections to the work shall be immediately made by the CONTRACTOR. Such checking by the ENGINEER shall not relieve the CONTRACTOR of any responsibilities for the accuracy or completeness of his work.

G. At completion of the work, the CONTRACTOR shall furnish Record Drawings indicating the final layout of all structures, roads, existing benchmarks, etc. The Record Drawings shall indicate all critical elevations of piping, structures, finish grades, etc.

1.12 ABANDONMENT AND SALVAGE OF EXISTING FACILITIES

A. The scope of work requires the CONTRACTOR to interface with existing structures, mechanical equipment, electrical facilities and piping which will be abandoned or otherwise removed and/or relocated as part of the work. Prior to beginning any work, associated with existing facilities to be abandoned, salvaged, or otherwise removed or relocated, the CONTRACTOR shall inform the ENGINEER of his intent so that all arrangements can be made with the CITY for disconnecting electrical service (where appropriate), isolating pipelines (where possible) or otherwise removing existing facilities from service to the extent possible. The CONTRACTOR shall not proceed without written authorization from the ENGINEER.

B. Pipelines: The CONTRACTOR shall abandon, salvage or otherwise remove existing pipelines or segments of existing pipelines shown to be abandoned in place, salvaged, or removed as part of the contract work. Unless otherwise indicated in the Contract Documents, all piping shown on the Drawings to be abandoned shall be abandoned in place. Pipe shown to be abandoned need only be removed a minimum three feet clear of new utilities to be installed. Abandon in place shall be defined as installing plugs, or other permanent closure, as reviewed and accepted by the ENGINEER, on all terminations, open ends or ends of pipe designated as being cut, capped and anchored in an acceptable manner. The pipe will remain buried unless otherwise noted.

C. Piping indicated on the Drawings as being removed, or any piping to be abandoned which interferes with new structures or piping, shall be excavated and removed using methods which will not disturb adjacent piping or other facilities. All pipe materials shall be subject to salvage by the CITY as defined below. Any remaining piping on both ends of pipe segments removed shall be abandoned in place, per the above definition. After

piping has been removed, the CONTRACTOR shall backfill the evacuated area in accordance with requirements set forth in other sections of these specifications.

D. Salvage: The CITY may desire to salvage certain items of existing equipment which are to be dismantled and removed during the course of construction. Prior to removal of any existing equipment or piping from the site of work, the CONTRACTOR shall ascertain from the ENGINEER whether or not the particular item or items are to be salvaged. Items to be salvaged shall be stockpiled on the site, or delivered to a storage area at a location as directed by the CITY. All other items of equipment shall be disposed of off site by the CONTRACTOR at his expense, in accordance with applicable laws, ordinances and regulations.

1.13 OPENINGS, CHASES, SLEEVES, INSERTS, ETC.

A. The General CONTRACTOR shall provide all openings, chases, etc., in his work to fit his own work and that of any other CONTRACTORS. All such openings or chases shown on the Drawings, or reasonably implied thereby, or as confirmed or modified by shop, setting, or erecting Drawings approved by the ENGINEER, shall be provided by the General CONTRACTOR.

B. Where pipes or conduits are to pass through slabs or walls, or where equipment frames or supports are to be installed as an integral part of an opening, the sleeves, opening forms or frames shall be furnished by the installer of the pipes, conduits, or equipment, but shall be placed by the General CONTRACTOR. Where hanger inserts and similar items are to be installed as an integral part of a slab or wall, they shall be furnished by the installer of the pipe or other equipment requiring the hanger, but shall be placed by the General CONTRACTOR.

C. When requested by the General CONTRACTOR, the installer of the pipes, conduit, or equipment, including those CONTRACTORS who require openings or chases in slabs and walls for passage of ducts, mounting of equipment, etc., shall furnish all necessary information, instructions, and materials to effect accurate installation of the required openings, chases, sleeves, frames, inserts, etc. When such items are secured in position, and just prior to construction of the surrounding slab or wall, the CONTRACTOR for whom the items are installed shall ascertain the proper number, locations, and settings thereof; and the General CONTRACTOR shall schedule his operations so as to provide a reasonable opportunity and time interval for such inspection.

D. Any costs resulting from correction of defective, ill timed, or mislocated work, or for subsequent work which becomes necessary because of omitted openings, chases, sleeves, frames, inserts, etc., shall be borne by the CONTRACTOR responsible therefor. To this end, no CONTRACTOR shall arbitrarily cut, drill, alter, damage, or otherwise endanger the work of another CONTRACTOR. The nature and extent of any corrective or additional work shall be subject to the approval of the ENGINEER following consultation with the CONTRACTORS involved.

1.14 LIMITS OF WORK AREA

A. The CONTRACTOR shall confine his construction operations within the Contract limits shown on the Drawings and/or property lines and/or fence lines. Storage of equipment

and materials, or erection and use of sheds outside of the Contract limits, if such areas are the property of the OWNER, shall be used only with the CITY's approval. Such storage or temporary structures, even within the Contract's limits, shall be confined to the CITY's property and shall not be placed on properties designated as easements or rights of way unless specifically permitted elsewhere in the Contract Documents.

1.15 WEATHER CONDITIONS

A. No work shall be done when the weather is unsuitable. The CONTRACTOR shall take necessary precautions (in the event of impending storms) to protect all work, materials, or equipment from damage or deterioration due to floods, driving rain, and wind. The OWNER reserves the right, through the opinion of the ENGINEER, to order that additional protection measures over and beyond those proposed by the CONTRACTOR, be taken to safeguard all components of the Project. The CONTRACTOR shall not claim any compensation for such precautionary measures so ordered, nor claim any compensation from the OWNER for damage to the work from weather elements.

B. The mixing and placing of concrete or pavement courses, the laying of masonry, sidewalks and installation of sewers mains, piping, structures and water mains shall be stopped during rainstorms, and all freshly placed work shall be protected by canvas or other suitable covering in such manner as to prevent running water from coming in contact with it. Sufficient coverings shall be provided and kept ready at hand for this purpose. The limitations and requirements for mixing and placing concrete or laying masonry shall be as described elsewhere in these Specifications.

1.16 PERIODIC CLEANUP - BASIC SITE RESTORATION

A. During construction, the CONTRACTOR shall regularly remove from the site of the work all accumulated debris and surplus materials of any kind which result from his operations. Unused equipment and tools shall be stored at the CONTRACTOR'S yard or base of operations for the Project.

B. When the work involves installation of sewers, manholes, underground structures, or other disturbance of existing features in or across streets, rights of way, easements, or private property, the CONTRACTOR shall (as the work progresses) promptly backfill, compact, grade, and otherwise restore the disturbed area to the basic condition which will permit resumption of pedestrian or vehicular traffic and any other critical activity or functions consistent with the original use of the land. The requirements for temporary paving of streets, walks, and driveways are specified elsewhere. Unsightly mounds of earth, large stones, boulders, and debris shall be removed so that the site presents a neat appearance.

C. The CONTRACTOR shall perform the cleanup work on a regular basis and as frequently as ordered by the ENGINEER. Basic site restoration in a particular area shall be accomplished immediately following the installation or completion of the required facilities in that area. Furthermore, such work shall also be accomplished, when ordered by the ENGINEER, if partially completed facilities must remain incomplete for some time period due to unforeseen circumstances.

D. Upon failure of the CONTRACTOR to perform periodic cleanup and basic restoration of the site to the ENGINEER's satisfaction, the OWNER may, upon five (5) days prior

written notice to the CONTRACTOR, without prejudice to any other rights or remedies of the OWNER, cause such work for which the CONTRACTOR is responsible to be accomplished to the extent deemed necessary by the ENGINEER, and all costs resulting therefrom shall be charged to the CONTRACTOR and deducted from the amounts of money that may be due him.

1.17 USE OF FACILITIES BEFORE COMPLETION

A. The OWNER reserves the right to enter and use any portion of the constructed facilities before final completion of the whole work to be done under this Contract. However, only those portions of the facilities which have been completed to the ENGINEER's satisfaction, as evidenced by his issuing a Certificate of Substantial Completion covering that part of the work, shall be placed in service.

1.18 CONSTRUCTION VIDEO

A. The CONTRACTOR shall record the entire project site including all concrete and asphalt pavements, curb and gutter, fencing to remain, structures to be demolished, and existing structures that are to be modified. The original recording shall be turned over to the ENGINEER prior to beginning construction activities. The recording shall be provided to the ENGINEER on a DVD. The video shall clearly identify existing site and structural conditions prior to construction. CONTRACTOR shall also record all driveways and landscaping of residences adjacent to project site.

PART 2 – PRODUCTS - (NOT USED)

PART 3 – EXECUTION - (NOT USED)

- - END OF SECTION - -

SECTION 01025 - MEASUREMENT AND PAYMENT

PART 1 – GENERAL

1.01 SCOPE

A. Payments to the CONTRACTOR shall be made on the basis of the Bid items as full and complete payment for furnishing all materials, labor, tools and equipment, and for performing all operations necessary to complete the work included in the Contract Documents. Such compensation shall also include payments for any loss or damages arising directly or indirectly from the work, or from any discrepancies between the actual quantities of work and those shown in the Contract Documents, or from any unforeseen difficulties which may be encountered during the prosecution of the work until the final acceptance by the CITY.

B. The prices stated in the Bid include full compensation for overhead and profit, all costs and expenses for taxes, labor, equipment, furnishing and repairing small tools and ordinary equipment, mobilization, home office expenses, patent fees and royalties, bond, insurance, labor for handling materials during inspection, together with any and all other costs and expenses for performing and completing the work as shown on the Contract Drawings and specified herein. In addition, the CONTRACTOR shall include the actual cost of social security taxes, unemployment insurance, worker's compensation, fringe benefits, inclusive of life and health insurance, union dues, pension, pension plans, vacations, and insurance and CONTRACTOR'S public liability and property damage insurance involved in the work based on the actual wages paid to such labor and all other general costs and profits, prorated to each item.

C. The CONTRACTOR'S attention is called to the fact that the quotations for the various items of work are intended to establish a total price for completing the work in its entirety. Should the CONTRACTOR feel that the cost for any item of work has not been established in the Bid Form or this Section, the cost for that Work shall be included in some other applicable Bid Item, so that the Bid for the project reflects the total price for completing the work in its entirety.

D. It is the intent of the CITY to obtain a complete and working installation, and any items of labor, equipment or materials which may reasonably be assumed as necessary to accomplish this end shall be supplied whether or not they are specifically shown on the Plans or stated herein.

1.02 PAYMENT REQUESTS

A. The format for Payment Requests shall be as directed by the ENGINEER. This shall include the level of breakdown and grouping of payment items.

B. The quantities for payment under this Contract shall be full compensation determined by actual measurement of the completed items, in place, ready for service and accepted by the CITY unless otherwise specified. The ENGINEER will witness all field measurements.

1.03 PAYMENT ITEMS

A. Item No. 1: Mobilization, Site Preparation and Demolition

Payment for **mobilization, site preparation and demolition**, as needed, for construction of the pump station will be made at the contract aggregate sum entered therefore in the proposal, which sum shall be full compensation for furnishing all labor, tools, and equipment, including but not limited to site preparation, tree trimming and removal, protection of existing utilities during construction, excavation, dewatering (if necessary), adherence to Trench Safety Act, demolition of existing equipment, piping, structures, and removal of said structures, equipment, conduit, panels and piping as shown on the drawings necessary for completion of the item, as well as obtaining and paying for all bonds, permits, and insurance.

B. Item No. 2: Materials, Installation, and Start-Up Services

For furnishing, installing and delivering to the CITY all necessary materials, concrete structures, equipment, supplies, appurtenances and start up services for **Pump Station 12 Upgrades** project, complete, will be paid for at the aggregate sum price bid. The price bid shall be full compensation for furnishing, F.O.B. at the site, all materials, equipment, supplies and appurtenances and shall include all items required for a complete, satisfactory and fully functional installation.

For all other costs incurred in completing the pump station construction, including installation of all materials, adherence to Trench Safety Act, sheeting and shoring, MOT, coordination with FPL, coordination with other existing utilities in the area, wet well coating, concrete structures, equipment and supplies, all required labor, miscellaneous costs, supervision, overhead and profit will be paid for at the aggregate sum price bid. The price bid shall be full compensation for a complete, satisfactory and fully functional installation acceptable to the CITY.

Payment for performing and coordinating start-up services including, but not limited to performance tests for the pumps, electrical control panel, level sensor devices and telemetry system as specified in the contract documents shall be included.

C. Item No. 3: By-Pass Pumping

For furnishi**ng, installing, operating, maintaining and removing a by-pass pumping system**, will be paid for from the aggregate sum amount proposed by the CONTRACTOR for this purpose. Such amount represents the amount the CONTRACTOR feels is necessary to install, operate, maintain, and remove an electrical by-pass pumping system **manned twenty-four hours per day**, seven days per week, which includes providing an electrical or diesel stand-by pump, with capacity equal to one of the new pumps, and a stand-by generator (if electrical stand-by), with sufficient capacity to power the by-pass system, both on-site at all times the by-pass is active, during the process of upgrading the project. This includes a 48-hour performance test period, to ensure that the bypass system as installed is satisfactory to the Engineer and the CITY. The CONTRACTOR shall perform this performance test prior to starting any demolition work. Once lift station upgrades are complete, the by-pass system must remain onsite and available for use for a total of 7 days after station start up to ensure that pump station performance is satisfactory to the Engineer and the CITY. Payment

includes demobilization and removal of the system and any necessary repairs, including pavement restoration, to return the site to its condition prior to the by-pass operation.

Please note, should the CONTRACTOR fail to obtain temporary electric service in a timely manner to power the bypass system, the CONTRACTOR shall be required to provide a diesel-diesel redundant bypass system at no additional cost to the OWNER. A timely manner is considered within a period of time that will not impact the project's critical path and result in the contract completion date to be missed.

D. Item No. 4: Odor Control Refurbishment

Dedicated allowance account for **refurbishment of the odor control system**. Parts and service are to be provided by BIOREM Technologies, Inc., any required installation to be provided by the Contractor. Payment will be made based on invoiced amounts only. Contractor shall include overhead and profit, and the cost of all other contract requirements (including but not limited to bonds, insurance, etc.) in other payment items.

E. Item No. 5: Site Restoration and Cleanup

Payment for performing **site restoration, clean-up**, including, but not limited to painting, asphalt paving, grading, driveways, sod, landscaping and any miscellaneous restoration work including all labor, materials and equipment required shall be made at the contract aggregate sum entered therefore in the proposal.

F. Item No. 6: FPL Service Upgrades:

Dedicated allowance for **work performed by FPL**. Payment will be made based on invoiced amounts. Contractor shall include overhead and profit, and the cost of all other contract requirements (including but not limited to bonds, liquidated damages, insurance, etc.) in other payment items.

G. Item No. 7: TOTAL BASE BID AMOUNT is the sum of Item 1 through Item 6, which constitute the complete cost for the Pump Station 12 Upgrades project.

1.04 FINAL APPLICATION FOR PAYMENT

A. Prior to submitting final application, make acceptable delivery of required documents, and other requirements as specified in Section 01700, Contract Closeout.

PART 2 – PRODUCTS – NOT USED

PART 3 – EXECUTION – NOT USED

- - END OF SECTION - -

SECTION 01040 - COORDINATION

PART 1 – GENERAL

1.01 THE REQUIREMENT

A. The CONTRACTOR shall allow the CITY or his agents, and other project CONTRACTOR'S or their agents, to enter upon the work for the purpose of constructing, operating, maintaining, removing, repairing, altering, or replacing such pipes, sewers, conduits, manholes, wires, poles, or other structures and appliances which may be required to be installed at or in the work. The CONTRACTOR shall cooperate with all aforesaid parties and shall allow reasonable provisions for the prosecution of any other work by the OWNER, or others, to be done in connection with his work, or in connection with normal use of the facilities.

B. Each CONTRACTOR shall cooperate fully with the CITY, the ENGINEER, and all other CONTRACTOR'S employed on the work, to effect proper coordination and progress to complete the project on schedule and in proper sequence. Insofar as possible, decisions of all kinds required from the ENGINEER shall be anticipated by the CONTRACTOR to provide ample time for inspection, or the preparation of instructions.

C. Each CONTRACTOR shall assume full responsibility for the correlation of all parts of his work with that of other CONTRACTOR'S. Each CONTRACTOR'S superintendent shall correlate all work with other CONTRACTOR'S in the laying out of work. Each CONTRACTOR shall lay out his own work in accordance with the Drawings, Specifications, and instructions of latest issue and with due regard to the work of other CONTRACTOR'S.

D. The CONTRACTOR shall coordinate with the CITY inspections and field visits. Such requests shall be in writing and presented to the CITY a minimum of one week in advance.

PART 2 – PRODUCTS – NOT USED

PART 3 – EXECUTION – NOT USED

- - END OF SECTION - -

SECTION 01070 – ABBREVIATIONS

PART 1 – GENERAL

1.01 WORK INCLUDED

A. Wherever in these specifications references are made to the standards, specifications, or other published data of the various national, regional, or local organizations, such organizations may be referred to by their acronym or abbreviation only. As a guide to the user of these specifications, the following acronyms or abbreviations which may appear in these specifications shall have the meanings indicated herein.

1.02 ABBREVIATIONS AND ACRONYMS

AAMA	Architectural Aluminum Manufacturer's Association
AASHTO	American Association of the State Highway and Transportation Officials
ACI	American Concrete Institute
ACPA	American Concrete Pipe Association
AFBMA	Anti Friction Bearing Manufacturer's Association, Inc.
AGMA	American Gear Manufacturer's Association
AHGDA	American Hot Dip Galvanizers Association
AI	The Asphalt Institute
AIA	American Institute of Architects
AISC	American Institute of Steel Construction
AISI	American Iron and Steel Institute
AITC	American Institute of Timber Construction
AMCA	Air Moving and Conditioning Association
ANSI	American National Standards Institute, Inc.
APA	American Plywood Association
API	American Petroleum Institute
APHA	American Public Health Association
APWA	American Public Works Association
ASA	Acoustical Society of America
ASAE	American Society of Agriculture Engineers

ASCE	American Society of Civil Engineers
ASHRAE	American Society of Heating, Refrigerating, and Air-Conditioning Engineers
ASLE	American Society of Lubricating Engineers
ASME	American Society of Mechanical Engineers
ASMM	Architectural Sheet Metal Manual
ASSE	American Society of Sanitary Engineers
ASTM	American Society for Testing and Materials
AWPA	American Wood Preservers Association
AWPI	American Wood Preservers Institute
AWS	American Welding Society
AWWA	American Water Works Association
BHMA	Builders Hardware Manufacturer's Association
CMA	Concrete Masonry Association
CRSI	Concrete Reinforcing Steel Institute
DERM	Department of Environmental Resource Management
DCPW	Miami-Dade County Public Works
DIPRA	Ductile Iron Pipe Research Association
EIA	Electronic Industries Association
ETL	Electrical Test Laboratories
FBC	Florida Building Code
FDER	Florida Department of Environmental Regulation
FDOT	Florida Department of Transportation
FS	Federal Specifications
IEEE	Institute of Electrical and Electronics Engineers
IES	Illuminating Engineering Society
IPCEA	Insulated Power Cable Engineers Association
ISA	Instrument Society of America
ISO	International Organization for Standardization

MBMA	Metal Building Manufacturer's Association
MTI	Marine Testing Institute
NAAM	National Association of Architectural Metal Manufacturer's
NACE	National Association of Corrosion Engineers
NBS	National Bureau of Standards
NEC	National Electrical Code
NEMA	National Electrical Manufacturer's Association
NFPA	National Fire Protection Association
NRCA	National Roofing Contractors Association
OSHA	Occupational Safety and Health Administration
PCA	Portland Cement Association
SMACCNA	Sheet Metal and Air Conditioning Contractors National Association
SSPC	Steel Structures Painting Council
SSPWC	Standard Specifications for Public Works Construction
SFWMD	South Florida Water Management District
UL	Underwriters Laboratories, Inc.

PART 2 – PRODUCTS (NOT USED)

PART 3 – EXECUTION (NOT USED)

- - END OF SECTION - -

SECTION 01090 - REFERENCE STANDARDS

PART 1 – GENERAL

1.01 WORK INCLUDED

A. Titles of Sections and Paragraphs: Captions accompanying specification sections and paragraphs are for convenience of reference only, and do not form a part of the Specifications.

B. Applicable Publications: Whenever in these Specifications references are made to published specifications, codes, standards, or other requirements, it shall be understood that wherever no date is specified, only the latest specifications, standards, or requirements of the respective issuing agencies which have been published as of the date of the opening of bids, shall apply; except to the extent that said standards or requirements may be in conflict with applicable laws, ordinances, or governing codes. No requirements set forth herein or shown on the Drawings shall be waived because of any provision of, or omission from, said standards or requirements.

C. Specialists, Assignments: In certain instances, Specification text requires (or implies) that specific work is to be assigned to specialists or expert entities, who must be engaged for the performance of that work. Such assignments shall be recognized as special requirements over which the CONTRACTOR has no choice or option. These requirements shall not be interpreted so as to conflict with the enforcement of building codes and similar regulations governing the Work; also they are not intended to interfere with local union jurisdiction settlements and similar conventions. Such assignments are intended to establish which party or entity involved in a specific unit of work is recognized as "expert" for the indicated construction processes or operations. Nevertheless, the final responsibility for fulfillment of the entire set of contract requirements remains with the CONTRACTOR.

1.02 REFERENCE SPECIFICATIONS, CODES, AND STANDARDS

A. Without limiting the generality of other requirements of the specifications, all work specified herein shall conform to or exceed the requirements of all applicable codes.

B. References herein to "Building Code" or FBC shall mean the Florida Building Code. The latest edition of the code as approved and used by the local agency as of the date of the Notice to Proceed, as adopted by the agency having jurisdiction, shall apply to the Work herein, including all addenda, modifications, amendments, or other lawful changes thereto.

C. In case of conflict between codes, reference standards, Drawings and the other Contract Documents, the most stringent requirements shall govern. All conflicts shall be brought to the attention of the ENGINEER for clarification and directions prior to ordering or providing any materials or labor. The CONTRACTOR shall follow the most stringent requirements.

D. Applicable Standard Specifications: The CONTRACTOR shall construct the Work specified herein in accordance with the requirements of the Contract Documents and

the referenced portions of those referenced codes, standards, and Specifications listed herein.

E. References herein to "OSHA Regulations for Construction" shall mean Title 29, Part 1926, Construction Safety and Health Regulations, Code of Federal Regulations (OSHA), including all changes and amendments thereto.

F. References herein to "OSHA Standards" shall mean Title 29, Part 1910, Occupational Safety and Health Standards, Code of Federal Regulations (OSHA), including all changes and amendments thereto.

PART 2 – PRODUCTS (NOT USED)

PART 3 – EXECUTION (NOT USED)

- - END OF SECTION - -

SECTION 01200 - PROJECT MEETINGS

PART 1 – GENERAL

1.01 PRECONSTRUCTION MEETING

A. Preconstruction Conference: Prior to the commencement of Work at the site, a preconstruction conference shall be held at a mutually agreed time and place which shall be attended by the Contractor, its superintendent, and its SUBCONTRACTOR'S as appropriate. Other attendees shall be:

1. Representatives of the CITY.
2. Governmental representatives as appropriate.
3. Others as requested by CONTRACTOR, CITY, or ENGINEER.

B. Unless previously submitted to the ENGINEER, the CONTRACTOR shall bring to the conference one copy each of the following:

1. Preliminary schedule.
2. Preliminary procurement schedule of major equipment and materials and items requiring long lead time.
3. Preliminary Shop Drawing/Sample/Substitute or "Or Equal" submittal schedule.
4. Schedule of Payment Items (lump sum price breakdown) for progress payment purposes.

C. The purpose of the conference is to designate responsible personnel and establish a working relationship. Matters requiring coordination shall be discussed and procedures for handling such matters established. The agenda shall include:

1. CONTRACTOR'S tentative schedules.
2. Transmittal, review, and distribution of CONTRACTOR'S submittals.
3. Processing applications for payment.
4. Maintaining record documents.
5. Critical work sequencing.
6. Field decisions and Change Orders.
7. Use of project site, office and storage areas, security, housekeeping, the CITY's needs.
8. Major equipment deliveries and priorities.

D. The ENGINEER shall preside at the preconstruction conference and shall arrange for keeping the minutes and distributing the minutes to all persons in attendance.

1.02 PROGRESS MEETINGS WITH ENGINEER:

A. In addition to other regular project meetings for other purposes (as indicated elsewhere in the Contract Documents), hold general progress meetings once per month with times coordinated with preparation of payment requests. Meeting dates shall be established by the ENGINEER. Require every entity then involved in the planning, coordination or performance of work to be properly represented at each meeting. Include (when applicable) CONSULTANT's, separate CONTRACTOR's (if any), principal SUBCONTRACTOR, suppliers/ manufacturers/fabricators, governing authorities, insurers, special supervisory personnel and others with an interest or expertise in the progress of the work. Review each entity's present and future needs including interface requirements, time, sequence, deliveries, access, site utilization, temporary facilities and services, hours of work, hazards and risks, housekeeping, submittals, change orders, and documentation of information for payment requests. Discuss whether each element of current work is ahead of schedule. Determine how behind-time work will be expedited, and secure commitments from the entities involved in doing so. Discuss whether schedule revisions are required to ensure that current work and subsequent work will be completed within the Contract Time. Review everything of significance which could affect the progress of the work.

B. Within seven days after each progress meeting date, the ENGINEER will forward copies of the minutes-of-the-meeting, to the CONTRACTOR.

PART 2 – PRODUCTS (NOT USED)

PART 3 – EXECUTION (NOT USED)

- - END OF SECTION - -

SECTION 01300 - SUBMITTALS

PART 1 – GENERAL

1.01 THE REQUIREMENT

A. This section specifies the means of all submittals. All submittals, whether their final destination is to the CITY, ENGINEER, or other representatives of the CITY, shall be directed through the ENGINEER. A general summary of the types of submittals and the number of copies required is as follows:

Copies to ENGINEER	Type of Submittal
2	Progress Schedule
2	Construction Schedule
2	Schedule of Payment Items
4	Progress Estimates
6	Shop Drawings
2	Certificates of Compliance
2	Warranties
2*	Product Samples

* Unless otherwise required in the specific Section where requested.

1.02 SUBMITTAL PROCEDURES

A. Transmit each submittal with a form acceptable to the ENGINEER, clearly identifying the enclosed material and other pertinent information specified in other parts of this section. Identify variations from Contract Documents which may be detrimental to successful performance of the completed Work.

B. With approval from the Engineer and Owner, submittals may be transmitted in electronic format only. The Contractor shall request in writing if electronical submittals is a preferred option. However, all final O&M manuals, submittals that contain signed/sealed drawings or calculations, certificates of compliance, and warranties must be provided hard copy in the quantities indicated above.

C. Revise and resubmit submittals as required, identify all changes made since previous submittals. Resubmittals shall be noted as such.

D. Distribute copies of reviewed submittals to concerned parties. Instruct parties to promptly report any inability to comply with provisions.

1.03 CONSTRUCTION PROGRESS SCHEDULE

A. The CONTRACTOR shall have the capability of preparing and utilizing computer-generated construction progress scheduling.

B. Each computer-generated construction progress schedules and associated report shall include the following tabulations: a list of activities in numerical order, a list of activity

precedence, schedules sequenced by Early Start Date and Late Start Date. Each schedule and report shall include the following minimum items:

1. Activity Numbers
2. Estimated Duration
3. Activity Description
4. Early Start Date (Calendar Dated)
5. Early Finish Date (Calendar Dated)
6. Latest Allowable Start Date (Calendar Dated)
7. Latest Allowable Finish Date (Calendar Dated)
8. Status (whether critical)

C. In addition, each construction progress schedule, network analysis and report shall be prefaced with the following summary data:

1. Contract Name and Number
2. CONTRACTOR'S Name
3. Contract Duration
4. Contract Schedule
5. The Effective or Starting Date of the Schedule (the date indicated in the Notice to Proceed)

D. The workday to calendar date correlation shall be based on an 8 hour day and 40 hour week with adequate allowance for holidays, adverse weather and all other special requirements of the work. Normal CITY hours are Monday through Friday 7:30am to 3:30pm.

E. If the CONTRACTOR desires to make changes in his method of operating which affect the construction progress schedule and related items, he shall notify the ENGINEER in writing stating what changes are proposed and the reason for the change. If the ENGINEER accepts these changes, in writing, the CONTRACTOR shall revise and submit, without additional cost to the CITY, all of the affected portions of the construction progress schedule, and associated reports. The construction progress schedule and related items shall be adjusted by the CONTRACTOR only after prior acceptance, in writing by the ENGINEER. Adjustments may consist of changing portions of the activity sequence, activity duration's, division of activities, or other adjustments as may be required. The addition of extraneous, nonworking activities and activities which add restraints to the construction progress schedule shall not be accepted.

F. Except where earlier completions are specified, schedule dates which show completion of all work prior to the contract completion date shall, in no event, be the basis for claim for delay against the CITY by the CONTRACTOR.

G. Construction progress schedules and related items which contain activities which extend beyond the contract completion date will not be accepted by the ENGINEER.

H. Whenever it becomes apparent from the current construction progress schedule and associated reports that delays to the critical path have resulted and the contract completion date will not be met, or when so directed by the ENGINEER, the CONTRACTOR shall take some or all of the following actions at no additional cost to the CITY. They shall submit to the ENGINEER for approval, a written statement of the steps they intend to take to remove or arrest the delay to the critical path in the current construction progress schedule. The following corrective actions would be considered for approval:

1. Increase construction manpower in such quantities and crafts as will substantially eliminate the backlog of work.

2. Increase the number of working days per week, the amount of construction equipment, or any combination of the foregoing, sufficiently to substantially eliminate the backlog of work.

3. Reschedule activities to achieve maximum practical concurrency of accomplishment of activities, and comply with the revised schedule.

I. If when so requested by the ENGINEER, the CONTRACTOR should fail to submit a written statement of the steps they intend to take or should fail to take such steps as reviewed and accepted in writing by the ENGINEER, the ENGINEER may direct the CONTRACTOR to increase the level of effort in manpower (trades), equipment and work schedule (overtime, weekend and holiday work, etc.) to be employed by the CONTRACTOR in order to remove or arrest the delay to the critical path in the current construction progress schedule, and the CONTRACTOR shall promptly provide such level of effort at no additional cost to the CITY.

J. If the completion of any activity, whether or not critical, falls more than 100 percent behind its previously scheduled and accepted duration, the CONTRACTOR shall submit for approval a schedule adjustment showing each such activity divided into two activities reflecting completed versus uncompleted work.

K. Shop drawings, which are not approved on the first submittal, shall be immediately resubmitted.

L. If the ENGINEER finds that the CONTRACTOR is entitled to any extension of the contract completion date, the ENGINEER's determination as to the total number of days extension shall be based upon the current construction progress schedule and on all data relevant to the extension. Such data shall be included in the next updating of the schedule and related items. Actual delays in activities which, according to the construction progress schedule, do not affect any contract completion date will not be the basis for a change therein.

M. From time to time it may be necessary for the contract schedule of completion time to be adjusted by the CITY in accordance with the Contract Documents as may be applicable. Under such conditions, the ENGINEER will direct the CONTRACTOR to reschedule the work or contract completion time to reflect the changed conditions, and the CONTRACTOR shall revise the construction progress schedule and related items accordingly, at no additional cost to the CITY.

N. CITY initiated changes that affect the critical path on the network diagram shall be the sole grounds for extending the completion dates.

O. Review and acceptance of the construction progress schedule, and related reports, by the ENGINEER is advisory only and shall not relieve the CONTRACTOR of the responsibility for accomplishing the work within the contract completion date. Omissions and errors in the construction progress schedule, and related reports shall not excuse performance less than that required by the Contract and in no way make the ENGINEER an insurer of the CONTRACTOR's success or liable for time or cost overruns flowing from any shortcomings in the construction progress schedule, and related reports.

P. The CONTRACTOR shall present and discuss the proposed schedule at the preconstruction conference.

Q. The construction progress schedule shall be based upon the precedence diagramming method of scheduling and shall be prepared in the form of a horizontal bar chart showing in detail the proposed sequence of the work and identifying all construction activities included but not limited to piping, all structures and related work specified herein to be performed under the Contract. The schedule shall be time scaled, identifying the first day of each week, with the estimated date of starting and completion of each stage of the work in order to complete the project within the contract time. The project critical path shall be clearly identified.

R. The progress schedule shall be plotted on 11 inch by 17 inch paper and shall be revised and updated monthly, depicting progress through the last day of the current month and scheduled progress through completion. Three up to date copies of the schedule shall be submitted along with the application for monthly progress payments for the same period.

1.04 SCHEDULE OF PAYMENT ITEMS

A. The CONTRACTOR shall submit a Schedule of Payment Items for review within two weeks after receiving the Notice to Proceed. The schedule shall contain the installed value of the component parts of Work for the purpose of making progress payments during the construction period.

B. The schedule shall be given in sufficient detail for the proper identification of Work accomplished. Each item shall include its proportional share of all costs including the CONTRACTOR's overhead, contingencies and profit. The sum of all scheduled items shall equal the total value of the Contract.

C. The CONTRACTOR shall expand or modify the above schedule and materials listing as required by the ENGINEER's initial or subsequent reviews.

1.05 SHOP DRAWINGS

A. The CONTRACTOR shall submit for review shop drawings for all mechanical, electrical, structural and instrumentation items associated with this project.

B. Shop drawings shall show the principal dimensions, weight, structural and operating features, type and/or brand of finish or shop coat, etc., depending on the subject of the Drawings.

C. When so specified, or if considered by the ENGINEER to be acceptable, the manufacturer's specifications, catalog data, descriptive matter, illustrations, etc. may be submitted for review

in place of shop drawings. In such case, the requirements shall be as specified for shop drawings, insofar as applicable.

D. The CONTRACTOR shall be responsible for the prompt submittal of all shop drawings so that there shall be no delay to the Work due to the absence of such Drawings. The ENGINEER will review the shop drawings within 10 calendar days of receipt of such Drawings. Reviewed shop drawings will be returned to the CONTRACTOR no later than 21 days after receipt.

E. Time delays caused by rejection of submittals are not cause for extra charges to the CITY or time extensions.

F. Requirements: All shop drawings shall be submitted to the ENGINEER through the CONTRACTOR. The CONTRACTOR is responsible for obtaining shop drawings from his SUBCONTRACTOR'S and returning reviewed Drawings to them. All Drawings shall be clearly marked with the name of the project, CITY, CONTRACTOR, and Bid Package number. Drawings shall be suitably numbered and stamped by the CONTRACTOR. Each shipment of Drawings shall be accompanied by a letter of transmittal giving a list of the drawing numbers and the names mentioned above.

G. Product Data: Where manufacturer's publications in the form of catalogs, brochures, illustrations, or other data sheets are submitted in lieu of prepared shop drawings, such submission shall specifically indicate the particular item offered. Identification of such items and relative pertinent information shall be made with indelible ink. Submissions showing only general information will not be accepted.

H. Product data shall include materials of construction, dimensions and piping, etc.

I. Warranties: When warranties are called for, a sample of the warranty shall be submitted with the shop drawings. The sample warranty shall be the same form that will be used for the actual warranty. Actual warranties shall be originals and notarized.

J. Work Prior to Review: No material or equipment shall be purchased, fabricated especially for this Contract, or delivered to the project site until the required shop drawings have been submitted, processed and marked either "FURNISH AS SUBMITTED" or "FURNISH AS CORRECTED". All materials and Work involved in the construction shall be as represented by said Drawings.

K. CONTRACTOR's Review: Only submittals, which have been checked and corrected, should be submitted to the CONTRACTOR by his SUBCONTRACTOR'S and vendors. Prior to submitting shop drawings to the ENGINEER, the CONTRACTOR shall check thoroughly all such Drawings to satisfy himself that the subject matter thereof conforms to the Drawings and Specifications in all respects. Drawings which are correct shall be marked with the date, checker's name and indications of the CONTRACTOR'S approval, and then shall be submitted to the ENGINEER other Drawings submitted to the ENGINEER will be returned to the CONTRACTOR unreviewed.

L. CONTRACTOR's Responsibility: The ENGINEERS review of shop drawings will be general and shall not relieve the CONTRACTOR of the responsibility for details of design, dimensions, etc., necessary for proper fitting and construction of the Work required by the Contract and for achieving the specified performance.

M. CONTRACTOR's Modifications: For submissions containing departures from the Contract Documents, the CONTRACTOR shall include proper explanation in his letter of transmittal. Should the CONTRACTOR submit a review that requires modifications to the structures, piping, layout, etc. detailed on the Drawings, he shall also submit for review details of the proposed modifications.

N. Substitutions: Whenever a particular brand or make of material, equipment, or other item is specified, or is indicated on the Drawings, it is for the purpose of establishing a standard of quality, design, and type desired and to supplement the detailed specifications. Any other brand or make which, in the opinion of the ENGINEER, is equivalent to that specified or indicated may be offered as a substitute subject to the following provisions:

1. CONTRACTOR shall submit for each proposed substitution sufficient details, complete descriptive literature, and performance data together with samples of the materials, where feasible, to enable the ENGINEER to determine if the proposed substitution is equal.

2. A list of installations where the proposed substitution is equal.

3. Where the acceptance of a substitution requires revision or redesign of any part of the Work, all such revision and redesign, and all new Drawings and details required therefore, shall be provided by the CONTRACTOR at his own cost and expense, and shall be subject to review of the ENGINEER.

4. In all cases the ENGINEER shall be the sole judge as to whether a proposed substitution is to be accepted. The CONTRACTOR shall abide by the ENGINEER's decision when proposed substitute items are judged to be unacceptable and shall in such instances furnish the item, or substitute, as specified. No substitute items shall be used in the Work without written acceptance of the ENGINEER.

5. Acceptance of any proposed substitution shall in no way release the CONTRACTOR from any of the provisions of the Contract Documents.

O. Complete Submittals: Each submittal shall be complete in all aspects incorporating all information and data required evaluating the products' compliance with the Contract Documents. Partial or incomplete submissions shall be returned to the CONTRACTOR without review.

P. Shop Drawing Distribution: The CONTRACTOR shall submit a minimum of 6 copies of all shop drawings to the ENGINEER for review. Shop drawings will be reviewed, stamped and distributed with the appropriate box checked either "FURNISH AS SUBMITTED", "FURNISH AS CORRECTED" or "REVISE AND RESUBMIT". The distribution of processed shop drawings will be as follows:

1. Drawings Marked "FURNISH AS SUBMITTED" or "FURNISH AS CORRECTED"

   2 copies returned to the CONTRACTOR

   2 copy transmitted to the CITY

   2 copy remain at the ENGINEER's office

2. Drawings Marked "REVISE AND RESUBMIT"

4 copies returned to the CONTRACTOR

1 copy remain at the ENGINEER's office

1 copy will be discarded

Q. If the CONTRACTOR requires additional copies of returned shop drawings, he shall include extra Drawings in his original submittal. The ENGINEER will process the Drawings and return them to the CONTRACTOR.

1.06 REQUEST FOR INFORMATION

A. All requests for information from the ENGINEER by the CONTRACTOR shall be submitted in writing.

B. The ENGINEER has seven working days to respond to the request for information in writing.

C. In the event that the ENGINEER cannot answer a request for information based on the data provided by the CONTRACTOR, the ENGINEER will request additional information from the CONTRATCTOR, in writing. Upon receipt of the additional information required, the ENGINEER will have three working days to answer the request.

1.07 WARRANTIES

A. Warranties called for in the Contract Documents shall be originals and submitted to the CITY through the ENGINEER. When warranties are required they shall be submitted prior to request for payment.

B. When advance copies of warranties are requested, they shall be submitted with, and considered as shop drawings.

C. The CONTRACTOR shall guarantee that all new equipment has the capacity specified and that it will operate without excess noise or vibration.

D. CONTRACTOR shall furnish **written warranties for the work** covering all workmanship and materials for a **minimum period of 1 year from final completion** (unless a longer period is specified elsewhere in the contract documents for specific equipment or systems). This shall include an agreement to repair or replace, at the CONTRACTOR'S expense, all defects that may appear in that time, which in the opinion of the ENGINEER, are due to defective workmanship or materials. All items not having a successful five-year operating history shall have the same guarantee as above but extended for five years less their successful operating period.

E. All **factory warranties shall have an effective date of one year from the date of substantial completion of the work, or when equipment is placed into service for beneficial use**, whichever comes first. Copies of factory warranties for all equipment furnished shall be submitted as described above, with the written guarantee, and shall be included in operation and maintenance manuals.

1.08 CERTIFICATES

A. Two copies of certificates of compliance and test reports shall be submitted for requested items to the ENGINEER prior to request for payment.

1.09 OPERATION AND MAINTENANCE MANUALS

A. General: The CONTRACTOR shall furnish and deliver to the ENGINEER six (6) complete Operation and Maintenance (O&M) Manuals for the substantial, complete systems including instructions, technical bulletins, and any other printed matter such as diagrams, prints or drawings, containing full information required for the proper operations, maintenance, and repair of all CONTRACTOR furnished piping and appurtenances. Each O&M Manual shall be bound together in appropriate three-ring binders. A detailed table of contents shall be provided for each Manual.

B. When written instructions include shop drawings and other information previously reviewed by the ENGINEER, only those editions which were accepted by the ENGINEER, and which accurately depict the piping and appurtenances installed, shall be incorporated in the O&M Manual.

PART 2 – PRODUCTS (NOT USED)

PART 3 – EXECUTION (NOT USED)

- END OF SECTION -

SECTION 01380 - CONSTRUCTION PHOTOGRAPHS

PART 1 – GENERAL

1.01 DESCRIPTION OF WORK

A. The CONTRACTOR shall take and submit construction photographs. Photographs shall be clean, sharp and clearly show details. Out-of-focus photographs will not be acceptable.

1.02 PHOTOGRAPHY REQUIRED/DELIVERY OF PRINTS

A. The CONTRACTOR shall submit the electronic versions of each construction photograph as follows:

1. Within fourteen (14) days of receiving Notice to Proceed **and with each application for payment.**

B. A minimum of ten (10) photographs shall be taken prior to construction and each day until completion of the work.

C. The CONTRACTOR shall take pre-construction photographs and video of the entire site (including force main route) after receiving the Notice to Proceed and prior to disturbing the site in any manner. The CONTRACTOR shall coordinate with the ENGINEER and CITY for site access.

PART 2 – PRODUCTS (NOT USED)

PART 3 – EXECUTION

3.01 GENERAL

A. For all photographs, the CONTRACTOR shall coordinate with the ENGINEER as to the actual number and location of views to be photographed and the day and time of photographing.

- - END OF SECTION - -

SECTION 01400 - QUALITY CONTROL

PART 1 – GENERAL

1.01 SAMPLING AND TESTING

A. Unless otherwise specified, all sampling and testing shall be in accordance with the methods prescribed in the current standards of the ASTM, as applicable to the class and nature of the article or materials considered; however, the CITY reserves the right to use any generally accepted system of sampling and testing which, in the opinion of the ENGINEER will insure the CITY that the quality of the workmanship is in full accord with the Contract Documents.

B. Any waiver by the CITY of any specific testing or other quality assurance measures, whether or not such waiver is accompanied by a guarantee of substantial performance as a relief from the specified testing or other quality assurance requirements as originally specified, and whether or not such guarantee is accompanied by a performance bond to assure execution of any necessary corrective or remedial work, shall not be construed as a waiver of any requirements of the Contract Documents.

C. Notwithstanding the existence of such waiver, the ENGINEER reserves the right to make independent investigations and tests and failure of any portion of the work to meet any of the requirements of the Contract Documents, shall be reasonable cause for the ENGINEER to require the removal or correction and reconstruction of any such work in accordance with the General Conditions.

1.02 SITE INVESTIGATION AND CONTROL

A. The CONTRACTOR shall verify all dimensions in the field and shall check field conditions continuously during construction. The CONTRACTOR shall be solely responsible for any inaccuracies built into the work due to its failure to comply with this requirement.

B. The CONTRACTOR shall inspect related and appurtenant work and shall report in writing to the ENGINEER any conditions which will prevent proper completion of the work. Failure to report any such conditions shall constitute acceptance of all site conditions, and any required removal, repair, or replacement caused by unsuitable conditions shall be performed by the CONTRACTOR within the scope of the Project.

1.03 INSPECTION AND TESTING

A. The CITY will employ and pay for the services of an independent testing laboratory for specified testing as specified by the ENGINEER.

B. The work or actions of the testing laboratory shall in no way relieve the CONTRACTOR of his obligations under the Contract. The laboratory testing work will include such inspections and testing required by the Contract Documents, existing laws, codes, ordinances, etc. The testing laboratory will have no authority to change the requirements of the Contract Documents, nor perform, accept or approve any of the CONTRACTOR's work.

C. The CONTRACTOR shall allow the ENGINEER ample time and opportunity for inspection and testing materials and equipment to be used in the work. The CONTRACTOR shall advise the ENGINEER promptly upon placing orders for materials and equipment so that arrangements may be made, if desired, for inspection before shipment from the place of

manufacture. The CONTRACTOR shall at all times furnish the ENGINEER and his representatives, facilities including labor, and allow proper time for inspecting and testing materials, equipment, and workmanship. The CONTRACTOR must anticipate that possible delays may occur in the execution of its work due to the necessity of materials and equipment being inspected and accepted for use. The CONTRACTOR shall furnish, at his own expense, all samples of materials required by the ENGINEER for testing, and shall make his own arrangements for providing water, electric power, or fuel for the various inspections and tests of structures and equipment.

D. The CITY will bear the cost of all tests, inspections, or investigations undertaken by the order of the ENGINEER for the purpose of determining conformance with the Contract Documents if such tests, inspections, or investigations are not specifically required by the Contract Documents, and if conformance is ascertained thereby. Whenever nonconformance is determined by the ENGINEER as a result of such tests, inspections, or investigations, the CONTRACTOR shall bear the full cost of any additional tests and investigations, which are ordered by the ENGINEER to ascertain subsequent conformance with the Contract Documents. All retesting shall be performed by the same testing laboratory which tested the failed sample.

1.04 RIGHT OF REJECTION/NON COMPLIANCE

A. The ENGINEER, acting for the CITY, shall have the right, at all times and places, to reject any articles or materials to be furnished hereunder which, in any respect, fail to meet the requirements of the Contract Documents, regardless of whether the defects in such articles or materials are detected at the point of manufacture or after completion of the work at the site. If the ENGINEER or its representative, through an oversight or otherwise, has accepted materials or work which is defective or which is contrary to the Contract Documents, such materials, no matter in what stage or condition of manufacture, delivery, or erection, may be subsequently rejected by the ENGINEER for the CITY.

B. The CONTRACTOR shall promptly remove rejected articles or materials from the site of the work after notification of rejection/non-compliance. All costs of removal and replacement of rejected articles or materials as specified herein shall be borne by the CONTRACTOR.

1.05 OTHER CONSTRUCTION CONSIDERATIONS

A. Cutting and Patching: The CONTRACTOR shall perform all cutting and patching of the work that may be required to make its several parts come together properly and fit it to receive or be received by such other work. The CONTRACTOR shall not endanger any work of others by cutting, excavating or otherwise altering their work and shall only cut or alter work with the written consent of the ENGINEER and of the other contractors whose work will be affected.

B. Sleeves and Openings: The CONTRACTOR shall provide all openings, chases, etc., to fit its own work and that of any other subcontractors and contractors. All such openings or chases shown on the Contract Drawings, or reasonably implied thereby, or as confirmed or modified by acceptable shop, setting or erecting drawings, shall be provided by the CONTRACTOR.

C. Where pipes or conduits are to pass through slabs or walls, or where equipment frames or supports are to be installed as integral part of an opening, the sleeves, openings, forms or frames shall be furnished by the installer of the pipes, conduits or equipment, but shall be placed by the CONTRACTOR. Where hanger inserts, anchor bolts and similar items are to be embedded in concrete as an integral part of a slab or wall, they shall be furnished by the

installer of the pipe or other equipment requiring the hanger, etc, but shall be placed by the CONTRACTOR.

D. Any cost resulting from correction of defective, ill timed, or mislocated work or for subsequent work which becomes necessary because of omitted openings, chases, sleeves, frames, inserts, etc., shall be borne by the CONTRACTOR or SUBCONTRACTOR responsible therefor. The CONTRACTOR shall not arbitrarily cut, drill, alter, damage, or otherwise endanger the work of another CONTRACTOR. In no case shall beams, lintels, or other structural members be cut without the proper authorization of the ENGINEER. The nature and extent of any corrective or additional work shall be subject to the acceptance of the ENGINEER following consultation with the affected parties.

E. Weather Conditions: Work that may be affected by inclement weather shall be suspended until proper conditions prevail. In the event of impending storms, the CONTRACTOR shall take necessary precautions to protect all work, materials and equipment from exposure.

F. Fire Protection: The CONTRACTOR shall take all necessary precautions to prevent fires at or adjacent to the work, including its own buildings and trailers. Adequate fire extinguisher and hose line stations shall be provided throughout the work area.

PART 2 – PRODUCTS (NOT USED)

PART 3 – EXECUTION (NOT USED)

- - END OF SECTION - -

SECTION 01510 - TEMPORARY UTILITIES

PART 1 – GENERAL

1.01 WORK INCLUDED

A. It shall be the CONTRACTOR's responsibility to provide equipment that is adequate for the performance of the work under this Contract within the time specified. Any existing force main shall be kept in satisfactory operating condition, shall be capable of safely transmitting flow from the pump station. All work hereunder shall conform to the applicable requirements of the OSHA Standards for Construction.

B. The CONTRACTOR shall provide for utilities and services for its own operations, as noted below. The CONTRACTOR shall furnish, install and maintain all temporary utilities during the contract period including removal upon completion of the work.

1.02 POWER AND LIGHTING

A. Under no circumstance shall the CITY provide temporary power. The CONTRACTOR shall coordinate and obtain a power source for temporary power from Florida Power and Light (FPL). All costs associated with the temporary power connections shall be borne the CONTRACTOR.

B. Construction Lighting: All work conducted at night or under conditions of deficient daylight shall be suitably lighted to insure proper work and to afford adequate facilities for inspection and safe working conditions. Temporary lighting shall be maintained during nonworking periods if the area is subject to access by the public.

C. Electrical Connections: All temporary connections for electricity shall be subject to review by the ENGINEER and the power company representative, and shall be removed in like manner at the CONTRACTOR's expense prior to final acceptance of the work.

D. Construction Wiring: All wiring for temporary electric light and power shall be properly installed and maintained and shall be securely fastened in place. All electrical facilities shall conform to the requirements of Subpart K of the OSHA Safety and Health Standards for Construction.

E. All costs in connection with the temporary services including, but not limited to, installation, utility company service charges, maintenance, relocation and removal shall be borne by the CONTRACTOR at no additional cost to the CITY.

1.03 WATER SUPPLY

A. The CITY shall not furnish water for general construction purposes for this Project. All water used must be metered through a City of Hialeah meter. Failure of the CONTRACTOR to meter the water, or providing others with water, could result in his being fined and/or a citation being issued against him in accordance Hialeah's tampering section.

B. All temporary piping, valves, hoses, equipment, and other items required for handling the water shall be furnished by the CONTRACTOR. Under no circumstances shall the CONTRACTOR utilize a water source until such source has been approved for use by the ENGINEER.

C. Care shall be exercised in the use of water and provision shall be made to protect the water supply from contamination and indiscriminate use by unauthorized persons. The CONTRACTOR shall use only potable water.

D. Potable Water: All drinking water on the site during construction shall be furnished by the CONTRACTOR and shall be bottled water or water furnished in suitable dispensers.

E. Removal of Connections: Before final acceptance of the work on the project, all temporary connections and piping installed by the CONTRACTOR shall be entirely removed, and all affected improvements shall be restored to their original condition, or better, to the satisfaction of the ENGINEER and to the CITY.

1.04 TEMPORARY SANITARY SERVICE

A. Sanitary conveniences, in sufficient numbers, shall be provided for the use of all persons employed on the jobsite, and properly screened from public observation, and maintained at suitable locations by the CONTRACTOR, all as prescribed by State Labor Regulations and local ordinances. The contents of same shall be removed and disposed of in a manner consistent with local and state regulations, as the occasion requires. The CONTRACTOR shall secure all sanitary facilities from unauthorized entrance during non-working hours. Sanitary facilities shall be removed from the site when no longer required.

1.05 TEMPORARY VENTILATION

A. The CONTRACTOR shall provide and maintain adequate ventilation for a safe working environment. In addition, forced air ventilation shall be provided for the curing of installed materials, humidity control and the prevention of hazardous accumulations of dust, gases or vapors.

1.06 COMMUNICATIONS

A. Telephone Services: The CONTRACTOR shall provide and maintain at all times during the progress of the work not less than one telephone in good working order, at or near the site of the work.

PART 2 – PRODUCTS (NOT USED)

PART 3 – EXECUTION (NOT USED)

- END OF SECTION -

SECTION 01530 - PROTECTION OF EXISTING FACILITIES

PART 1 – GENERAL

1.01 THE REQUIREMENT

A. CONTRACTOR shall be responsible for the preservation and protection of property adjacent to the work site against damage or injury as a result of his operations under this Contract. Any damage or injury occurring on account of any act, omission or neglect on the part of the CONTRACTOR shall be restored in a proper and satisfactory manner or replaced by and at the expense of the CONTRACTOR to an equal or superior condition than previously existed.

B. CONTRACTOR shall comply promptly with such safety regulations as may be prescribed by the CITY or the local authorities having jurisdiction and shall, when so directed, properly correct any unsafe conditions created by, or unsafe practices on the part of, his employees. In the event of the CONTRACTOR's failure to comply, the CITY may take the necessary measures to correct the conditions or practices complained of, and all costs thereof will be deducted from any monies due the CONTRACTOR. Failure of the ENGINEER to direct the correction of unsafe conditions or practices shall not relieve the CONTRACTOR of his responsibility hereunder.

C. In the event of any claims for damage or alleged damage to property as a result of work under this Contract, the CONTRACTOR shall be responsible for all costs in connection with the settlement of or defense against such claims. Prior to commencement of work in the vicinity of property adjacent to the work site, the CONTRACTOR, at his own expense, shall take such surveys as may be necessary to establish the existing condition of the property. Before final payment can be made, the CONTRACTOR shall furnish satisfactory evidence that all claims for damage have been legally settled or sufficient funds to cover such claims have been placed in escrow, or that an adequate bond to cover such claims has been obtained.

1.02 WORK INCLUDED

A. The CONTRACTOR shall protect all existing utilities and improvements not designated for removal and shall restore damaged or temporarily relocated utilities and improvements to a condition equal to or better than they were prior to such damage or temporary relocation, all in accordance with requirements of the Contract Documents.

B. CONTRACTOR shall contact Sunshine 811 prior to mobilizing onsite and document/photograph all markings made of utilities in the project area.

C. The CONTRACTOR shall verify the exact locations and depths of all utilities shown on the contract drawings and marked by Sunshine 811 and the CONTRACTOR shall make exploratory excavations of all utilities that may interfere with the work. All such exploratory excavations shall be performed as soon as practicable after award of Contract and, in any event, a sufficient time in advance of construction to avoid possible delays to the CONTRACTOR's work. When such exploratory excavations show the utility location as shown to be in error, the CONTRACTOR shall so notify the ENGINEER.

D. The number of exploratory excavations required shall be that number which is sufficient to determine the alignment and grade of the utility.

1.03 RIGHTS OF WAY

A. The CONTRACTOR shall not do any work that would affect any gas, sewer, or water pipeline; any telephone, or electric transmission line; any fence; or any other structure, nor shall the CONTRACTOR enter upon the rights of way involved until notified by the ENGINEER that the CITY has secured authority therefor from the proper party. After authority has been obtained, the CONTRACTOR shall give said party due notice of its intention to begin work, and shall give said party convenient access and every facility for removing, shoring, supporting, or otherwise protecting such pipeline, transmission line, ditch, fence, or structure, and for replacing same. When two or more contracts are being executed at one time on the same or adjacent land in such manner that work on one contract may interfere with that of another, the CITY shall determine the sequence and order of the work. When the territory of one contract is the necessary or convenient means of access for the execution of another contract, such privilege of access or any other reasonable privilege may be granted by the CITY to the CONTRACTOR so desiring, to the extent, amount, in the manner, and at the times permitted. No such decision as to the method or time of conducting the work or the use of territory shall be made the basis of any claim for delay or damage.

1.04 PROTECTION OF STREET OR ROADWAY MARKERS

A. The CONTRACTOR shall not destroy, remove, or otherwise disturb any existing survey markers or other existing street or roadway markers without proper authorization. No pavement breaking or excavation shall be started until all survey or other permanent marker points that will be disturbed by the construction operations have been properly referenced for easy and accurate restoration. It shall be the CONTRACTOR's responsibility to notify the proper representatives of the CITY of the time and location that work will be done. Such notification shall be sufficiently in advance of construction so that there will be no delay due to waiting for survey points to be satisfactorily referenced for restoration. All survey markers or points disturbed by the CONTRACTOR without proper authorization by the ENGINEER, will be accurately restored by the CITY at the CONTRACTOR's expense after all street or roadway resurfacing has been completed.

1.05 RESTORATION OF PAVEMENT

A. General: All paved areas including asphaltic concrete berms cut or damaged during construction shall be replaced with similar materials and of equal thickness to match the existing adjacent undisturbed areas, except where specific resurfacing requirements have been called for in the Contract Documents or in the requirements of the agency issuing the permit. All temporary and permanent pavement shall conform to the requirements of the affected pavement owner. All pavements which are subject to partial removal shall be neatly saw cut in straight lines.

B. Temporary Resurfacing: As required by the contract documents, the CONTRACTOR shall place temporary surfacing promptly after backfilling and shall maintain such surfacing until proceeding with the final restoration improvements.

C. Permanent Resurfacing: In order to obtain a satisfactory junction with adjacent surfaces, the CONTRACTOR shall saw cut back and trim the edge so as to provide a clean, sound, vertical joint before permanent replacement of an excavated or damaged portion of pavement. Damaged edges of pavement along excavations and elsewhere shall be trimmed back by saw cutting in straight lines. All pavement restoration and other facilities restoration shall be constructed to finish grades compatible with adjacent undisturbed pavement.

D. Restoration of Sidewalks or Private Driveways: Wherever sidewalks or private roads have been removed for purposes of construction, the CONTRACTOR shall place suitable temporary sidewalks or roadways promptly after backfilling to the satisfaction of the ENGINEER and the CITY, and shall maintain them in satisfactory condition for the period of time fixed by the authorities having jurisdiction over the affected portions before proceeding with the final restoration or, if no such period of times is so fixed, the CONTRACTOR shall maintain said temporary sidewalks or roadways until the final restoration thereof has been made.

1.06 EXISTING UTILITIES AND IMPROVEMENTS

A. General: The CONTRACTOR shall protect all underground utilities and other improvements which may be impaired during construction operations. It shall be the CONTRACTOR's responsibility to ascertain the actual location of all existing utilities and other improvements that will be encountered in its construction operations, and to see that such utilities or other improvements are adequately protected from damage due to such operations. The CONTRACTOR shall take all possible precautions for the protection of unforeseen utility lines to provide for uninterrupted service and to provide such special protection as may be necessary.

B. Utilities to be Moved: In case it shall be necessary to move the property of any public utility or franchise holder, such utility company or franchise holder will, upon request of the CONTRACTOR, be notified by the CITY to move such property within a specified reasonable time. When utility lines that are to be removed are encountered within the area of operations, the CONTRACTOR shall notify the ENGINEER a sufficient time in advance for the necessary measures to be taken to prevent interruption of service.

C. Where the proper completion of the work requires the temporary or permanent removal and/or relocation of an existing utility or other improvement which is shown, the CONTRACTOR shall remove and, without unnecessary delay, temporarily replace or relocate such utility or improvement in a manner satisfactory to the ENGINEER and the owner of the facility. In all cases of such temporary removal or relocation, restoration to former location shall be accomplished by the CONTRACTOR in a manner that will restore or replace the utility or improvement as nearly as possible to its former locations and to as good or better condition than found prior to removal.

D. City’s Right of Access: The right is reserved to the CITY and to the owners of public utilities and franchises to enter at any time upon any public street, alley, right of way, or easement for the purpose of making changes in their property made necessary by the work of this Contract.

E. Underground Utilities Shown or Indicated: Existing utility lines that are shown or the locations of which are made known to the CONTRACTOR prior to excavation and that

are to be retained, and all utility lines that are constructed during excavation operations shall be protected from damage during excavation and backfilling and, if damaged, shall be immediately repaired by the CONTRACTOR.

F. Existing Utilities: Known utilities and structures adjacent to or encountered in the work are shown on the Drawings. The locations shown are taken from existing plans; however, it is expected that there may be some discrepancies and omissions in the locations and quantities of utilities and structures shown. Those shown are for the convenience of the CONTRACTOR only, and no responsibility is assumed by either the CITY or the ENGINEER for their accuracy or completeness. No request for additional compensation or Contract time resulting from encountering utilities not shown will be considered. The CONTRACTOR shall explore sufficiently ahead of the work to allow time for any necessary adjustments.

G. Approval of Repairs: All repairs to a damaged improvement are subject to inspection and approval by an authorized representative of the improvement owner before being concealed by backfill or other work.

H. Field Relocation: During the process of construction, it is expected that minor relocations of the work may be necessary. Such relocations shall be made only by the direction of the ENGINEER at the CONTRACTOR's expense. If existing structures are encountered that will prevent construction as shown, notify the ENGINEER before continuing with the work in order that the ENGINEER may make such field revisions as necessary to avoid conflict with the existing structures. If the CONTRACTOR fails to notify the ENGINEER when an existing structure is encountered, and shall proceed with the work despite this interference, the CONTRACTOR does so at his own risk.

I. Maintaining in Service: All power, and telephone or other communication cable ducts, gas and water mains, irrigation lines, sewer lines, storm drain lines, poles, and overhead power and communication wires and cables encountered along the line of the work shall remain continuously in service during all the operations under the Contract, unless other arrangements satisfactory to the ENGINEER are made with the owner of said pipelines, duct, main, irrigation line, sewer, storm drain, pole, or wire or cable. The CONTRACTOR shall be responsible for and shall repair all damage due to its operations, and the provisions of this Section shall not be abated even in the event such damage occurs after backfilling or is not discovered until after completion of the backfilling.

1.07 TREES WITHIN STREET RIGHTS OF WAY AND PROJECT LIMITS

A. General: The CONTRACTOR shall exercise all necessary precautions so as not to damage or destroy any trees or shrubs, including those lying within street rights of way and project limits, and shall not trim or remove any trees unless such trees have been approved for trimming or removal by the jurisdictional agency or CITY. All existing trees and shrubs which are damaged during construction shall be trimmed or replaced by the CONTRACTOR or a certified tree company under permit from the CITY and to the satisfaction of the CITY. Tree trimming and replacement shall be accomplished in accordance with the following paragraphs.

B. Trimming: Symmetry of the tree shall be preserved; no stubs or splits or torn branches left; clean cuts shall be made close to trunk or large branch. Spikes shall not be used for climbing live trees. All cuts over 1 1/2 inches in diameter shall be coated with an

asphaltic emulsion material. Note: Prior to any tree trimming the CONTRACTOR shall obtain permission from the CITY in writing.

C. Replacement: The CONTRACTOR shall immediately notify the CITY if any tree is damaged by the CONTRACTOR's operations. If, in the opinion of the CITY, the damage is such that replacement is necessary, the CONTRACTOR shall replace the tree at its own expense. The tree shall be of a like size and variety as the tree damaged, or, if of a smaller size, the CONTRACTOR shall pay to the CITY of said tree compensatory payment acceptable to the tree owner, subject to the approval by the CITY.

1.08 NOTIFICATION BY THE CONTRACTOR

A. Prior to any excavation in the vicinity of any existing underground facilities, including all water, sewer, storm drain, gas, or other pipelines; all buried electric power, communications, or television cables; all traffic signal and street lighting facilities; the CONTRACTOR shall notify the respective authorities representing the owners or agencies responsible for such facilities not less than 3 days nor more than 7 days prior to excavation so that a representative of said owners or agencies can be present during such work if they so desire. Refer to Logo on drawing G-1 of the Contract Drawings.

PART 2 – PRODUCTS (NOT USED)

PART 3 – EXECUTION (NOT USED)

- - END OF SECTION - -

SECTION 01550 - SITE ACCESS AND STORAGE

PART 1 – GENERAL

1.01 HIGHWAY LIMITATIONS

A. The CONTRACTOR shall make its own investigation of the condition of available public and private roads and of clearances, restrictions, bridge load limits, and other limitations affecting transportation and ingress and egress to the site of the work. It shall be the CONTRACTOR's responsibility to construct and maintain any haul roads required for its construction operations.

1.02 TEMPORARY CROSSINGS

A. General: Wherever necessary or required for the convenience of the public or individual residents at street or highway crossings, private driveways, or elsewhere, the CONTRACTOR shall provide suitable temporary bridges over unfilled excavations, except in such cases as the CONTRACTOR shall secure the written consent of the individuals or authorities concerned to omit such temporary bridges, which written consent shall be delivered to the ENGINEER prior to excavation. All such bridges shall be maintained in service until access is provided across the backfilled excavation. Temporary bridges for street and highway crossing shall conform to the requirements of the authority having jurisdiction in each case, and the CONTRACTOR shall adopt designs furnished by said authority for such bridges, or shall submit designs to said authority for approval, as may be required.

B. Street Use: Nothing herein shall be construed to entitle the CONTRACTOR to the exclusive use of any public street, alleyway, or parking area during the performance of the work hereunder, and it shall so conduct its operations as not to interfere unnecessarily with the authorized work of utility companies or other agencies in such streets, alleys, ways, or parking areas. No Street shall be closed to the public without first obtaining permission of the ENGINEER and proper governmental authority. Where excavation is being performed in primary streets or highways, one lane in each direction shall be kept open to traffic at all times unless otherwise provided or shown. Toe boards shall be provided to retain excavated material if required by the ENGINEER or the agency having jurisdiction over the street or highway. Fire hydrants on or adjacent to the work shall be kept accessible to fire fighting equipment at all times. Temporary provisions shall be made by the CONTRACTOR to assure the use of sidewalks and the proper functioning of all gutters, sewer inlets, and other drainage facilities.

C. Traffic Control: For the protection of traffic in public or private streets and ways, the CONTRACTOR shall provide, place, and maintain all necessary barricades, traffic cones, warning signs, lights, and other safety devices in accordance with the requirements of the "Manual of Uniform Traffic Control Devices, Part VI Traffic Controls for Street and Highway Construction and Maintenance Operations," published by U.S. Department of Transportation, Federal Highway Administration (ANSI D6.1). The CONTRACTOR shall take all necessary precautions for the protection of the work and the safety of the public. All barricades and obstructions shall be illuminated at night, and all lights shall be kept burning from sunset until sunrise. The CONTRACTOR shall station such guards or flaggers and shall conform to such special safety regulations relating to traffic control as may be required by the public authorities within their respective jurisdictions. All signs, signals, and barricades

shall conform to the requirements of Subpart G, Part 1926, of the OSHA Safety and Health Standards for Construction.

D. Street Closure: If closure of any street is required during construction, a formal application for a street closure shall be made to the authority having jurisdiction at least 30 days prior to the required street closure in order to determine necessary sign and detour requirements.

1.03 CONTRACTOR'S SITE ACCESS

A. Unless otherwise required by the CITY, delivery and employee access shall be kept unrestricted during working hours.

1.04 CONTRACTOR'S WORK AND STORAGE AREA

A. Storage areas shall be secured by the CONTRACTOR. Responsibility for protection and safekeeping of equipment and materials at or near the sites will be solely that of the CONTRACTOR and no claim shall be made against the CITY by reasons of any act of an employee or trespasser. Should an occasion arise necessitating access to an area occupied by stored equipment and/or materials, the CONTRACTOR shall immediately move them. No equipment or materials shall be placed upon the CITY's property until it is acceptable to the CITY.

B. If the CONTRACTOR requires additional staging area, the CONTRACTOR shall obtain such areas from off-site sources. The CONTRACTOR shall pay for any off site area he requires.

C. Upon completion of the Contract, the CONTRACTOR shall remove from the storage areas all of their equipment, temporary fencing, surplus materials, rubbish, etc., and restore the areas to pre-constructions or better.

1.05 TRAFFIC CONTROL

A. The CONTRACTOR shall maintain traffic and protect the public from all damage to persons and property within the Contract Limits, in accordance with all applicable state, local, and CITY regulations. The CONTRACTOR shall conduct its operations so as to maintain and protect access, for vehicular and pedestrian traffic, to and from all properties and business establishments and joining or adjacent to those streets affected by its operations, and to subject the public to a minimum of delay and inconvenience. Suitable signs, barricades, railing, etc., shall be erected and the work outlined by adequate lighting at night. Danger lights shall be provided as required. Watchmen and flagmen shall be provided as may be necessary for the protection of traffic.

B. All dirt or debris spilled from the CONTRACTOR's trucks on existing pavements shall be removed by the CONTRACTOR immediately.

1.06 SECURITY

A. The CONTRACTOR shall employ watchmen and security guards to protect the job site against vandalism, burglary, theft, trespassing, etc. The CONTRACTOR shall care for and protect against loss or damage of all material to be incorporated in the construction for the duration of the project and shall repair or replace damaged or lost materials and damage to structures. The CONTRACTOR shall be responsible for providing, maintaining and securing gates used for construction purposes for the duration of the project.

PART 2 – PRODUCTS (NOT USED)

PART 3 – EXECUTION (NOT USED)

- - END OF SECTION - -

SECTION 01560 - TEMPORARY ENVIRONMENTAL CONTROLS

PART 1 – GENERAL

1.01 EXPLOSIVES AND BLASTING

A. The use of explosives on the work will not be permitted.

1.02 DUST ABATEMENT

A. The CONTRACTOR shall furnish all labor, equipment, and means required and shall carry out effective measures wherever and as often as necessary to prevent its operation from producing dust in amounts damaging to property, cultivated vegetation, or domestic animals, or causing a nuisance to persons living in or occupying buildings in the vicinity. The CONTRACTOR shall be responsible for any damage resulting from any dust originating from its operations. The dust abatement measures shall be continued until the CONTRACTOR is relieved of further responsibility by the ENGINEER. No separate payment will be allowed for dust abatement measures and all costs thereof shall be included in the Aggregate Sum items in the Proposal.

1.03 RUBBISH CONTROL

A. During the progress of the work, the CONTRACTOR shall keep the site of the work and other areas used by it in a neat and clean condition, and free from any accumulation of rubbish. The CONTRACTOR shall dispose of all rubbish and waste materials of any nature occurring at the work site, and shall establish regular intervals of collection and disposal of such materials and waste. The CONTRACTOR shall also keep its haul roads free from dirt, rubbish, and unnecessary obstructions resulting from its operations. Disposal of all rubbish and surplus materials shall be off the site of construction in accordance with local codes and ordinances governing locations and methods of disposal, and in conformance with all applicable safety laws, and to the particular requirements of Part 1926 of the OSHA Safety and Health Standards for Construction.

1.04 SANITATION

A. Toilet Facilities: Fixed or portable chemical toilets shall be provided wherever needed for the use of employees. Toilets at construction job sites shall conform to the requirements of Part 1926 of the OSHA Standards for Construction.

B. Such facilities shall be made available when the first employees arrive on the work, shall be properly secluded from public observation, and shall be constructed and maintained in suitable numbers and at such points and in such manner as may be required.

C. The CONTRACTOR shall maintain the sanitary facilities in a satisfactory and sanitary condition at all time and shall enforce their use. He shall rigorously prohibit the committing of nuisances on the site of the work, on the lands of the CITY, or an adjacent property.

D. Sanitary and Other Organic Wastes: The CONTRACTOR shall establish a regular daily collection of all sanitary and organic wastes. All wastes and refuse from sanitary facilities provided by the CONTRACTOR or organic material wastes from any other source related to the CONTRACTOR's operations shall be disposed of away from the site in a manner

satisfactory to the ENGINEER and in accordance with all laws and regulations pertaining thereto.

1.05 CHEMICALS

A. All chemicals used during project construction or furnished for project operation, whether defoliant, soil sterilant, herbicide, pesticide, disinfectant, paint, fuel, solvent or reactant of other classification, shall show approval of either the U.S. Environmental Protection Agency or the U.S. Department of Agriculture. The handling, storage, use and disposal of all such chemicals and disposal of residues shall be in strict accordance with all applicable rules and regulations of Federal, State and local jurisdictional agencies and the printed instructions of the manufacturer and all regulatory requirements. Copies of antidote literature shall be kept at the job site office. A supply of antidotes shall be kept at the CONTRACTOR's office.

1.06 NOISE CONTROL

A. Noise resulting from the CONTRACTOR's work shall not exceed the noise levels and other requirements stated in local ordinances. The CONTRACTOR shall be responsible for curtailing noise resulting from his operation. He shall, upon written notification from the ENGINEER or the noise control officers, make any repairs, replacements, adjustments, additions and furnish mufflers when necessary to fulfill requirements.

1.07 EROSION ABATEMENT AND WATER POLLUTION

A. It is imperative that any CONTRACTOR dewatering operation not contaminate or disturb the environment of the properties adjacent to the work. The CONTRACTOR shall, therefore, schedule and control his operations to confine all runoff water from disturbed surfaces, water from dewatering operations that becomes contaminated with lime silt, muck and other deleterious matter, fuels, oils, bitumens, calcium chloride, chemicals and other polluting materials.

B. The CONTRACTOR shall construct temporary silting basin(s) of adequate size and provide all necessary temporary materials, operations and controls including, but not limited to, filters, coagulants, screens, and other means necessary to attain the required discharge water quality.

C. The CONTRACTOR shall be responsible for providing, operating and maintaining materials and equipment used for conveying the clear water to the point of discharge. All pollution prevention procedures, materials, equipment and related items shall be operated and maintained until such time as the dewatering operation is discontinued. Upon the removal of the materials, equipment and related items, the CONTRACTOR shall restore the area to the condition prior to its commencing work.

1.08 PRECAUTIONS DURING ADVERSE WEATHER

A. During adverse weather and against the possibility thereof, the CONTRACTOR shall take all necessary precautions so that the work may be properly done and satisfactory in all respects. When required, protection shall be provided by use of tarpaulins, wood and building paper shelters, or other acceptable means. The CONTRACTOR shall be responsible for all changes caused by adverse weather.

B. The ENGINEER may suspend construction operations at any time when, in his judgment, the conditions are unsuitable or the proper precautions are not being taken, whatever the weather conditions may be, in any season.

1.09 HURRICANE AND STORM WARNINGS

A. General

1. During such periods of time as are designated by the United States Weather Bureau as being a hurricane alert, the CONTRACTOR shall perform all precautions as necessary to safeguard the work and property, including the removal of all small equipment and materials from the site, lashing all other equipment and materials to each other and to rigid construction, and any other safety measures as may be directed by the ENGINEER.

B. Upon Notification of a Hurricane Watch

1. Formal notification to all CONTRACTORS to prepare and submit for approval a Plan of Action for the specific actions to be taken on their particular projects.

2. Formal notification to the CONTRACTORS to implement their approved Plan of Action to protect the project and the public.

3. For pipeline construction projects within the public right-of-ways, the CONTRACTOR will be notified by the Construction Manager's Office to suspend his construction operations. The CONTRACTOR will backfill all open trenches, remove all construction equipment and materials from the right-of-way, remove unnecessary traffic barricades and signs, secure remaining barricades by "half-burial" or "double sand bags."

1.10 PERIODIC CLEANUP AND BASIC SITE RESTORATION

A. During construction, the CONTRACTOR shall regularly remove from the site all accumulated debris and surplus materials of any kind which results from its operations. Unused equipment and tools shall be stored at the CONTRACTOR's yard or base of operations for the project.

B. The CONTRACTOR shall perform the cleanup work on a regular basis and as frequently as ordered by the ENGINEER. Basic site restoration in a particular area shall be accomplished immediately following the installation or completion of the required facilities in that area. Furthermore, such work shall also be accomplished, when ordered by the ENGINEER, if partially completed facilities must remain incomplete for some time period due to unforeseen circumstances.

C. Upon failure of the CONTRACTOR to perform periodic clean up and basic restoration of the site to the ENGINEER's satisfaction, the ENGINEER may, upon 5 days prior written notice to the CONTRACTOR, employ such labor and equipment as it deems necessary for the purpose, and all costs resulting therefrom shall be charged to the CONTRACTOR and deducted from amounts of money that it may be due.

PART 2 – PRODUCTS (NOT USED)

PART 3 – EXECUTION (NOT USED)

- - END OF SECTION - -

SECTION 01600 - MATERIALS AND EQUIPMENT

PART 1 – GENERAL

1.01 GENERAL

A. The word "Products," as used herein, is defined to include purchased items for incorporation into the work, regardless of whether specifically purchased for project or taken from CONTRACTOR'S stock of previously purchased products. The word "Materials," is defined as products which must be substantially cut, shaped, worked, mixed, finished, refined, or otherwise fabricated, processed, installed, or applied to form units of work. The word "Equipment" is defined as products with operational parts, regardless of whether motorized or manually operated, and particularly including products with service connections (wiring, piping, and other like items). Definitions in this paragraph are not intended to negate the meaning of other terms used in Contract Documents, including "specialties," "systems," "structure," "finishes," "accessories," "furnishings," special construction," and similar terms, which are self explanatory and have recognized meanings in the construction industry.

1.02 QUALITY ASSURANCE

A. Source Limitations: To the greatest extent possible for each unit of work, the CONTRACTOR shall provide products, materials, or equipment of a singular generic kind from a single source.

B. Compatibility of Options: Where more than one choice is available as options for CONTRACTOR'S selection of a product, material, or equipment, the CONTRACTOR shall select an option which is compatible with other products, materials, or equipment already selected. Compatibility is a basic general requirement of product/material selections.

1.03 DESIGN

A. Equipment and appurtenances shall be designed in conformity with the ASME, AIEE, NEMA and other generally accepted applicable standards and shall be rugged construction and of sufficient strength to withstand all stresses which may occur during fabrication, testing, transportation, installation and all conditions of operation. All bearings and moving parts shall be adequately protected by bushings or other acceptable means against wear, and provision shall be made for adequate lubrication by readily accessible devices. Details shall be designed for appearance as well as utility. Protruding members, joints, corners, gear covers, etc., shall be finished in appearance.

B. All exposed welds on machinery shall be ground smooth and the corners of structural shapes shall be rounded or chamfered.

1.04 PRODUCT DELIVERY STORAGE HANDLING

A. The CONTRACTOR shall deliver, handle, and store products in accordance with supplier's written recommendations and by methods and means, which will prevent damage, deterioration, and loss including theft. Delivery schedules shall be controlled to minimize long term storage of products at site and overcrowding of construction spaces. In particular, the CONTRACTOR shall provide delivery/installation coordination to ensure minimum holding or storage times for products recognized to be flammable, hazardous, easily

damaged, or sensitive to deterioration, theft, and other sources of loss, regardless if they furnished by the CONTRACTOR or the owner.

1.05 TRANSPORTATION AND HANDLING

A. Products shall be transported by methods to avoid product damage and shall be delivered in undamaged condition in supplier's unopened containers or packaging, dry.

B. The CONTRACTOR shall provide equipment and personnel to handle products, materials, and equipment including those provided by the CITY, by methods to prevent soiling and damage.

C. The CONTRACTOR shall provide additional protection during handling to prevent marring and otherwise damaging products, packaging, and surrounding surfaces.

1.06 STORAGE AND PROTECTION

A. Products shall be stored in accordance with suppliers written instructions, with seals and labels intact and legible. Sensitive products shall be stored in weather tight enclosures and temperature and humidity ranges shall be maintained within tolerances required by supplier's written instructions.

B. For exterior storage of fabricated products, they shall be placed on sloped supports above ground. Products subject to deterioration shall be covered with impervious sheet covering; ventilation shall be provided to avoid condensation.

C. Loose granular materials shall be stored on solid surfaces in a well drained area and shall be prevented from mixing with foreign matter.

D. Storage shall be arranged to provide access for inspection. The CONTRACTOR shall periodically inspect to assure products are undamaged and are maintained under required conditions.

E. Storage shall be arranged in a manner to provide access for maintenance of stored items and for inspection.

1.07 MAINTENANCE OF STORAGE

A. Stored products shall be periodically inspected on a scheduled basis. The CONTRACTOR shall maintain a log of inspections and shall make said log available to the ENGINEER on request.

B. The CONTRACTOR shall verify that storage facilities comply with supplier's product storage requirements.

C. The CONTRACTOR shall verify that supplier required environmental conditions are maintained continually.

D. The CONTRACTOR shall verify that surfaces of products exposed to the elements are not adversely affected and that any weathering of finishes is acceptable under requirements of Contract Documents.

1.08 MAINTENANCE OF EQUIPMENT STORAGE

A. For mechanical and electrical equipment in long term storage, the CONTRACTOR shall provide a copy of the supplier's service instructions to accompany each item, with notice on enclosed instruction shown on exterior of package.

B. Equipment shall be serviced on a regularly scheduled basis, and a log of services shall be maintained and submitted as a record document to the ENGINEER.

1.09 LUBRICANTS

A. During testing and prior to acceptance, the CONTRACTOR shall furnish all lubricants necessary for the proper lubrication of all equipment furnished under this Contract.

1.10 SPECIAL TOOLS

A. For each type of equipment furnished by him, the CONTRACTOR shall provide a complete set of all special tools (including calibration and test equipment) which may be necessary for the adjustment, operation, maintenance and disassembly of such equipment.

B. Special tools shall be delivered at the same time as the equipment to which they pertain. The CONTRACTOR shall properly store and safeguard such special tools until completion of the work, at which time they shall be delivered to the CITY.

1.11 PROTECTION AGAINST ELECTROLYSIS

A. Where dissimilar metals are used in conjunction with each other, suitable insulation shall be provided between adjoining surfaces so as to eliminate direct contact and any resultant electrolysis. The insulation shall be bituminous impregnated felt, heavy bituminous coatings, nonmetallic separators or washers, or other acceptable materials.

1.12 FASTENERS

A. All necessary bolts, anchor bolts, nuts, washers, plates and bolt sleeves shall be furnished by the CONTRACTOR in accordance herewith. Bolts shall have suitable washers and, where so required, their nuts shall be hexagonal.

B. All bolts, anchor bolts, nuts, washers, plates, and bolt sleeves shall be Type 316 stainless steel unless otherwise specifically indicated or specified.

C. Unless otherwise specified, stud, tap, and machine bolts shall be of the best quality refined bar iron. Hexagonal nuts of the same quality of metal as the bolts shall be used.

1.13 SALVAGED AND EXCAVATED MATERIALS

A. In the absence of special provisions in other Sections of the Specifications, salvage materials, equipment or supplies that occur are the property of the CITY and shall be cleaned and stored as directed by the ENGINEER.

B. All excavated materials needed for backfilling operation shall be stored on site. Where additional area is needed for stockpiling, it shall be obtained by the CONTRACTOR.

PART 2 – PRODUCTS (NOT USED)

PART 3 – EXECUTION (NOT USED)

- - END OF SECTION - -

SECTION 01660 - EQUIPMENT TESTING AND START-UP

PART 1 – GENERAL

1.01 GENERAL

A. Equipment testing and startup are requisite to satisfactory completion of the contract and, therefore, shall be completed within the Contract time.

B. As construction of the project enters the final stages of completion, the CONTRACTOR shall, in accordance with the requirements set forth in the Contract Documents, attend to the following items:

1. Schedule equipment manufacturer's visits to site.
2. Calibration of instruments and controls.
3. Perform required testing adjusting and balancing of project components.
4. Schedule start up and initial operation.
5. Furnish skilled personnel during initiation operation.
6. City operation and maintenance training.

1.02 EQUIPMENT TESTING

A. The CONTRACTOR shall provide the services of an experienced and authorized representative of the supplier of each item of equipment purchased by the CONTRACTOR (excluding minor items of equipment specifically exempted by the ENGINEER in writing), who shall visit the site of the work and inspect, check, adjust if necessary, and approve the equipment installation. In each case, the CONTRACTOR shall arrange to have the supplier's representative revisit the job site as often as necessary until any and all trouble is corrected and the equipment installation and operation are satisfactory to the ENGINEER.

B. The CONTRACTOR shall coordinate with the CITY as necessary to schedule owner furnished equipment manufacturers to be on site during start up procedures and operations training.

C. The CONTRACTOR shall require that each supplier's representative furnish to the ENGINEER a written report addressed to the CITY, and copied to the ENGINEER, certifying that the equipment has been properly installed and lubricated, is in accurate alignment, is free from any undue stress imposed by connecting piping or anchor bolts, and has been operated satisfactorily under full load conditions is ready for operation and the CITY'S operating personnel have been instructed in the operation, maintenance and lubrication of the equipment.

D. The CONTRACTOR shall be responsible for scheduling all operations testing. The CONTRACTOR is advised that the ENGINEER and the CITY'S operating personnel will witness operations testing.

E. The supplier's representative shall instruct the CITY'S operating personnel in correct operation and maintenance procedures. The instruction shall demonstrate start up, operation, control, adjustment, trouble shooting, servicing, maintenance, and shutdown of each item of equipment whether purchased by the CONTRACTOR or owner furnished. Such instruction shall be scheduled at a time arranged with the CITY at least 2 weeks in advance and shall be provided while the respective representative's equipment is fully operational. On site instruction shall be given by qualified persons who have been made familiar in advance with the equipment and systems at the project site. The CONTRACTOR shall have submitted, and had accepted, the O&M Manuals (specified in Section 01300) prior to commencement of training.

F. The CONTRACTOR shall notify the ENGINEER at least 14 days in advance of each equipment test or CITY training session.

G. Training shall be provided to the CITY'S personnel between the hours of 7:30 A.M. and 3:30 P.M. as necessary.

H. The CONTRACTOR shall furnish all personnel, power, water, chemicals, fuel, oil, grease, and all other necessary equipment, facilities, and services required for conducting the tests.

1.03 STARTUP

A. The startup of each facility is a highly complex operation requiring the combined technical expertise of the CONTRACTOR, suppliers, sub CONTRACTORS, the ENGINEER, and the CITY. The CONTRACTOR shall provide the effective coordination of all parties necessary for the successful startup.

B. The startup shall not be commenced until all required leakage tests, and equipment tests have been completed to the satisfaction of the ENGINEER.

C. All defects in materials or workmanship that appear during this test period shall be immediately corrected by the CONTRACTOR. Time lost for equipment repairs, wiring corrections, control point settings, or other reasons which actually interrupt the startup may, at the discretion of the ENGINEER, be justifiable cause for extending the startup test duration.

D. During the startup, the CONTRACTOR shall provide the services of authorized representatives of the suppliers, in addition to those services required under operations testing, as necessary, to correct faulty equipment operation.

PART 2 – PRODUCTS (NOT USED)

PART 3 – EXECUTION (NOT USED)

- - END OF SECTION - -

SECTION 01700 - PROJECT CLOSEOUT

PART 1 – GENERAL

1.01 FINAL CLEANUP

A. The CONTRACTOR shall promptly remove from the vicinity of the completed work, all rubbish, unused materials, concrete forms, construction equipment, and temporary structures and facilities used during construction. Final acceptance of the work by the CITY will be withheld until the CONTRACTOR has satisfactorily complied with the foregoing requirements for final cleanup of the project site.

1.02 CLOSEOUT TIMETABLE

A. The CONTRACTOR shall establish dates for equipment testing, acceptance periods, and on site instructional periods (as required under the Contract). Such dates shall be established not less than one week prior to beginning any of the foregoing items, to allow the CITY, the ENGINEER, and their authorized representatives sufficient time to schedule attendance at such activities.

1.03 FINAL SUBMITTALS

A. Before the final acceptance of the project, the CONTRACTOR shall submit to the ENGINEER (or to the CITY if indicated) certain records, certifications, etc., which are specified elsewhere in the Contract Documents. Missing, incomplete or unacceptable items, as determined by the ENGINEER or the CITY, shall constitute grounds for withholding final payment to the CONTRACTOR. A partial list of such items appears below, but is shall be the CONTRACTOR's responsibility to submit any other items which are required in the Contract Documents:

1. Written Test results of project components, where required.
2. Performance affidavits for equipment, where required.
3. Record Drawings.
4. Written guarantees, where required.
5. Certificates of inspection and acceptance by local governing agencies having jurisdiction.
6. Releases from all parties who are entitled to claims against the subject project, property, or improvement pursuant to the provisions of law.
7. Keying Schedule, if applicable.

1.04 PUNCH LISTS

A. Final cleaning and repairing shall be scheduled upon completion of the project.

B. The ENGINEER will make his final inspection whenever the CONTRACTOR has notified the ENGINEER that the work is ready for the inspection. Any work not found acceptable and

requiring cleaning, repair and/or replacement will be noted on the "Punch" list. Work that has been inspected and accepted by the ENGINEER shall be maintained by the CONTRACTOR, until final acceptance of the entire project.

C. Whenever the CONTRACTOR has completed the items on the punch list, he shall again notify the ENGINEER that it is ready for final inspection. This procedure will continue until the entire project is accepted by the ENGINEER. The "Final Payment" will not be processed until the entire project has been accepted by the ENGINEER and all of the requirements in previous Article 1.03 "Final Submittals" have been satisfied.

1.05 TOUCH UP AND REPAIR

A. The CONTRACTOR shall touch up and repair damage to all field painted and factory finished equipment. Touch up of equipment panels, etc., shall match as nearly as possible the original finish. If in the opinion of the ENGINEER the touch up work is not satisfactory, the CONTRACTOR shall repaint the item.

1.06 CLEANING

A. Before the final acceptance of the project, the CONTRACTOR shall accomplish the cleaning and final adjustments of the various building components as follows:

1. Clean and lubricate all finish hardware after adjustment for proper operation.

2. Touch up marks of defects in painted surfaces and touch up any similar defects in factory finished surfaces.

3. Remove all stains, marks, fingerprints, soil, spots, and blemishes from all finish surfaces.

1.07 MAINTENANCE AND GUARANTEE/WARRANTY

A. The CONTRACTOR shall comply with all maintenance and guarantee requirements of the Contract Documents.

B. Replacement of earth fill or backfill, where it has settled below the required finish elevations, shall be considered as a part of such required repair work, and any repair or resurfacing constructed by the CONTRACTOR which becomes necessary by reason of such settlement shall likewise be considered as a part of such required repair work unless the CONTRACTOR shall have obtained a statement in writing from the affected private owner or public agency releasing the CITY from further responsibility in connection with such repair or resurfacing.

C. The CONTRACTOR shall make all repairs and replacements promptly upon receipt of written order from the CITY. If the CONTRACTOR fails to make such repairs or replacements promptly, the CITY reserves the right to do the work and the CONTRACTOR and his surety shall be liable to the CITY for the cost thereof.

D. CONTRACTOR shall furnish written warranties the work covering all workmanship and materials for a minimum period of one year from the date of Substantial Completion (unless a longer period is specified elsewhere in the contract documents for specific equipment or systems). This shall include an agreement to repair or replace, at the CONTRACTOR's

expense, all defects that may appear in that time, which in the opinion of the ENGINEER, are due to defective workmanship or materials. All items not having a successful five-year operating history shall have the same guarantee as above but extended for five years less their successful operating period.

E. All factory warranties shall have an effective date of one year from the date of substantial completion of the work, or when equipment is placed into service for beneficial use, whichever comes first. Copies of factory warranties for all equipment furnished shall be submitted as described above, with the written guarantee, and shall be included in operation and maintenance manuals.

1.08 GREASE, OIL AND FUEL

A. All grease, oil and fuel required for testing of equipment shall be furnished by the CONTRACTOR. The CONTRACTOR shall also furnish a one year's supply of lubricants including grease and oil of the type recommended by the manufacturer for each item of equipment supplied.

1.09 TOOLS

A. Any special tools (including grease guns or other lubricating devices) which may be necessary for the adjustment, operation, and maintenance of any equipment shall be furnished with the respective equipment. The CONTRACTOR shall furnish a complete list of tools and instructions for their use, recommended by the manufacturer or supplier with the Shop Drawing Submittal.

1.10 SPARE PARTS

A. Spare parts for equipment shall be furnished where indicated in the equipment specifications. Spare parts shall be identical and interchangeable with original parts. Parts shall be supplied, prepared for storage, in clearly identified containers, except large or bulky items which may be wrapped in polyethylene.

B. The parts shall be stored separately in a locked area, maintained by the CONTRACTOR, and shall be delivered to the CITY at a location designated by the CITY. The CONTRACTOR shall furnish an inventory listing all spare parts for each piece of equipment.

1.11 RECORD DRAWINGS

A. During the entire construction operation, the CONTRACTOR shall maintain records of all deviations from the Drawings and Specifications and shall prepare therefrom As-Built Record Drawings in AutoCAD (latest version) showing correctly and accurately all changes and deviations from the Work made during construction to reflect the Work as it was actually constructed. It is the responsibility of the Contractor to check the As-Built Record Drawings for errors and omissions prior to submittal to the CITY and certify in writing that the As-Built Record Drawings are correct and accurate, including the actual location of all piping including building exposed and internal piping, electrical/signal conduits in or below the concrete floor, indicate the size, depth and voltage in each conduit. These drawings shall conform to recognized standards of drafting, shall be neat, legible and on mylar or other reproducible material acceptable to the ENGINEER.

B. During the life of the Contract, the Contractor shall retain the services of a Florida Registered Land Surveyor who shall maintain records of the installation, including all deviations from Plans and Specifications.

C. Measure and Record all information for all projects concurrently with construction progress.

D. As-built sets of drawings shall comprise of all original bid set drawings, updated with surveyed as built information (as applicable). The complete set of drawings shall be submitted for review and approval by the ENGINEER and the CITY. Partial submittals will not be accepted.

E. As-Built Record Drawings with three printed hard copies which have been signed and sealed by the surveyor shall be submitted to the CITY for the Engineer's review. Plans shall conform to recognized standards of drafting and the minimum technical standards as set forth by the Board of Professional Surveyors and Mappers, shall be neat, legible and on 24-inch by 36-inch paper. Final acceptance will not be made until the set of as-built record drawings and three sets of signed and sealed hard copies have been approved and accepted by the CITY.

F. Provide 3 CDs with all final approved As-Built Record Drawings in the latest version of ACAD as required by the Engineer.

PART 2 – PRODUCTS (NOT USED)

PART 3 – EXECUTION (NOT USED)

- - END OF SECTION - -

SECTION 02050 - DEMOLITION

PART 1 – GENERAL

1.01 THE REQUIREMENT

A. The CONTRACTOR shall remove and dispose of or salvage any existing structure, piping, conduits, electrical equipment, mechanical equipment, or appurtenances or portions thereof, as shown on the Drawings or required to complete the project.

B. All materials designated for disposal shall, when released by the CITY, become the CONTRACTOR's property and shall be removed from the site to the CONTRACTOR's own place of disposal.

1.02 SUBMITTALS

A. The CONTRACTOR shall submit for review, in accordance with Section entitled "Submittals" the proposed methods, equipment and operation sequence. Include coordination for shut off, temporary services, continuation of service and other applicable items to ensure no interruption of operations except as herein before specified.

1.03 JOB CONDITIONS

A. Protection: The CONTRACTOR shall execute the demolition and removal work to prevent damage or injury to structures, occupants thereof and adjacent features which might result from falling debris or other causes, and so as not to interfere with the use, and free and safe passage to and from adjacent structures.

B. Closing or obstructing of roadways adjacent to the work by the placement or storage of materials will not be permitted. All operations shall be conducted with a minimum interference to traffic on these ways.

C. The CONTRACTOR shall repair damage done to facilities to remain, or to any property belonging to the CITY.

D. Scheduling: The CONTRACTOR shall carry out its operations so as to avoid interference with operations and work in the existing facilities.

E. Notification: At least 48 hours prior to commencement of a demolition or removal, the CONTRACTOR shall notify the CITY in writing of its proposed schedule therefor. No removals shall be started until it is acceptable to the CITY.

1.04 DUST CONTROL

A. The CONTRACTOR shall use temporary enclosures and other suitable methods to limit the amount of dust and dirt rising and scattering in the air to the lowest practical level. Existing electrical and mechanical equipment to remain shall be protected from damage, dust, and debris.

PART 2 – PRODUCTS (NOT USED)

PART 3 – EXECUTION

3.01 GENERAL

A. Prior to commencing work, the CONTRACTOR shall check all underground and exposed existing utility and process piping and all equipment in any way associated or in the proximity to the items to be removed and shall verify that the piping is inactive (abandoned) and that electric power to equipment, lighting, controls, etc., has been permanently disconnected. Active services shall be brought to the attention of the CITY for proper action.

B. The CONTRACTOR shall remove all equipment and accessories in a workmanlike manner and shall take all necessary precautions to avoid damaging existing equipment, piping, and structure which are to be retained. Damages shall be repaired or replaced at the expense of the CONTRACTOR.

C. The CONTRACTOR shall proceed with the removal of the structures, equipment, piping, and appurtenances in a sequence designed to maintain Pump Station 6 in continuous operation.

D. All supports, pedestals, and anchors shall be removed with the equipment structures and piping unless otherwise specified or required. Concrete bases, anchor bolts, and other supports shall be removed to approximately one inch below the surrounding finished area; and the recesses shall be patched to match the adjacent areas. Superstructure wall and roof openings shall be closed; damaged surfaces shall be patched to match the adjacent areas, as specified under applicable sections of these Specifications, and as shown on the Drawings, or as indicated by the CITY. Wall sleeves and castings shall be cleared of extraneous materials and filled with non shrinking grout as recommended by manufacturer for water tightness required. All openings in concrete shall be closed in a manner meeting the requirements of the appropriate sections of these Specifications, as shown on the Drawings, and as acceptable to the CITY.

3.02 UNAUTHORIZED REMOVAL

A. Any equipment, piping and appurtenances removed without proper authorization, shall be replaced to the satisfaction of the CITY at no cost to the CITY.

3.03 SALVAGED ITEMS

A. Items noted by the CITY to be salvaged shall remain the property of the CITY. Valves shall be salvaged when located on pipelines shown to be demolished. The CONTRACTOR shall carefully move salvaged equipment to a CITY designated location.

3.04 DEMOLITION

A. All materials and equipment shown on the Drawings to be removed or demolished shall become the property of the CONTRACTOR, with exception of items noted by the CITY be salvaged. The CONTRACTOR shall dispose of all demolition materials, equipment, debris and all other items off the project site and in conformance with all existing applicable laws and regulations.

3.05 STRUCTURAL REMOVALS

A. The CONTRACTOR shall remove structures to the lines and grades shown, unless otherwise indicated by the CITY.

B. All wood, concrete, brick, tile, concrete block, roofing materials, reinforcement, structural or miscellaneous metals, plaster, wire mesh and other items contained in or upon the structure shall be removed and taken from the project site. These items shall not be used in backfill.

C. Finishes: After removal of parts or all of masonry walls, slabs and like work, which tie into new work or existing work, the point of junction shall be neatly repaired so as to leave only finished edges and surface exposed. The jambs, sills and heads of any new windows, passageways, doors or other openings cut into the new work or existing work, shall be dressed with new masonry, concrete or metal to provide a smooth, finished appearance.

D. Anchoring: Where new anchoring materials, including bolts, nuts, hangers, welds and reinforcing steel, are required to attach new work to the existing work, they shall be included under this Section, except where specified elsewhere.

3.06 MECHANICAL REMOVALS

A. Mechanical removals shall consist of dismantling and removing of existing piping, equipment and other appurtenances as shown or required for the completion of the work. It shall include cutting, capping and plugging as required.

3.07 ELECTRICAL REMOVALS

A. General: Electrical removals shall consist of the removal of conduits and wires, and miscellaneous electrical equipment all as shown, specified or required to perform the work.

B. All existing electrical equipment to be removed shall be removed with such care as may be required to prevent unnecessary damage, to keep existing systems in operation and to keep the integrity of the grounding systems.

C. Conduits: Conduits and wires shall be abandoned or removed where noted or as shown on the Drawings. All wires in abandoned conduits shall be removed. Abandoned conduits concealed in floor or ceiling slabs or in walls, shall be cut flush with the slab or wall at the point of entrance. The conduits shall be suitably plugged and the area repaired in a flush, smooth, approved manner. Exposed conduits and their supports shall be disassembled and removed from the project site. Repair all areas of removal to prevent rust spots on exposed surfaces.

D. Motors: Motors shall be disconnected and removed where shown or specified.

E. Miscellaneous: Wall switches, receptacles, starters and other miscellaneous electrical equipment shall be removed and disposed of off the project site as required. Care shall be taken in removing all equipment so as to minimize damage to architectural and structural members. Any damage incurred shall be repaired.

3.08 REPAIR WORK

A. Surfaces of walls, or floors, which are exposed by any of the removals specified herein, and which have holes, scars, chipped or other damaged surfaces revealed by the removal, shall be repaired by the CONTRACTOR as specified in Division 3.

3.09 CLEANUP

A. The CONTRACTOR shall remove from the project site all debris resulting from the demolition and removal operations as it accumulates. Upon completion of the demolition work, all materials, equipment, waste and debris of every sort shall be removed and the premises shall be left clean, neat and orderly.

- - END OF SECTION - -

SECTION 02141 -TEMPORARY BYPASS PUMPING SYSTEMS

PART 1 – GENERAL

1.01 SUMMARY:

A. Section Includes: Furnishing all materials, labor, equipment, power, maintenance, etc. to implement a temporary pumping system for the purpose of diverting the existing raw wastewater flow around the work area at each lift station for the durations specified and disassembly of the bypass pumping system as specified herein.

B. Be responsible for the design, installation and operation of the temporary pumping system. The bypass system shall meet the requirements of all codes and regulatory agencies having jurisdiction.

1.02 SYSTEM DESCRIPTION:

A. Design Requirements:

1. Provide bypass pumping systems with firm capacity to pump the following peak flow:

   a. Pump Station 12: 730 GPM @ 73 ft TDH

2. Provide all pumps of adequate size to handle peak flow, and temporary discharge piping to ensure that the total flow of the main can be safely diverted around the pumping station. Bypass pumping system will be required to operate 24 hours per day.

3. For projects where twenty-four (24) hour by-pass pumping of sewage is required, the Contractor shall provide personnel for manning and maintenance.

4. Provide control system for the bypass pumping system which will run the pump(s) between preset levels. Additional controls are required to for high-high level and low-low level alarms, and any pump faults.

5. Provide adequate standby equipment available and ready for immediate operation and use in the event of an emergency or breakdown. One standby pump for each size pump utilized shall be installed at the mainline flow bypassing locations, ready for use in the event of primary pump failure.

6. The bypass pumping system shall be capable of bypassing the flow around the work area as necessary for satisfactory performances of work.

7. Make all arrangements for bypass pumping during the time when the pumping station is shut down for any reason. System must overcome any existing force main pressure on discharge.

8. As the proposed bypass system, will be installed within a residential area, the CONTRACTOR shall take the necessary precautions to maintain bypass pump noise levels to a minimum. CONTRACTOR shall utilize hospital grade silencers, sound attenuated enclosures or a combination thereof.

B. It is essential to the operations of the existing wastewater system that there be no interruption in the flow of sewage throughout the duration of the project. To this end, provide, maintain and operate all temporary facilities such as, pumping equipment (both primary and back-up units as required), conduits, all necessary power, and all other labor and equipment necessary to intercept the wastewater flow before it reaches the point where it would interfere with the work, carry it past the work and return it to the existing wastewater downstream of the work.

C. Provide all necessary means to safely convey the raw wastewater past the work area. Do not stop or impede the main flows under any circumstances.

D. Maintain wastewater flow around the work area in a manner that will not cause surcharging of wastewater, damage to existing pipe line and that will protect public and private property from damage and flooding.

E. Fluid Character: Provide pumping units to pump raw wastewater.

F. Pumps shall be capable of passing a minimum of a 3-inch non-deformable sphere.

1.03 SUBMITTALS:

A. Provide all submittals, including the following, in accordance with Section 01300, SUBMITTALS.

B. Data:

1. Pump Data:

a. Pump performance curves. Draw curves for the specified conditions. Include head, brake horsepower, efficiency and required NPSH, all plotted as a function of capacity, from zero to maximum capacity.

b. Calculations of static Lift, friction losses, and flow velocity.

c. Submit a specific, detailed description of the proposed pumping system.

d. Submit operating descriptions, component descriptions, control schematics, electrical connection diagrams and general arrangement drawings, for control equipment.

C. Drawings:

1. Shop Drawings:

a. Submit shop drawings, including arrangement and erection drawings of the equipment and equipment operating characteristics. Include the following:

1) Submit detailed plans and descriptions outlining all provisions and precautions to be taken regarding the handling of existing wastewater flows. The plan shall include schedules, locations elevations, capacities of equipment, materials and all other incidental items necessary and/or required to insure proper protections of the facilities, including protection of the access and bypass pumping locations from damage due to the

discharge flows, and compliance with the requirements and all permit conditions

2) The plan shall include but not be limited to details of the following:

a) Staging areas for pumps;

b) Number, size, material, location and method of installation of suction piping;

c) Number, size, material, location of installation of discharge piping;

d) Bypass pump sizes, capacity, number of each size to be on site and motor power of fuel requirements;

e) Standby power generator size, location;

f) Downstream discharge plan;

g) Thrust and restraint block sizes and locations;

h) Sections showing suction and discharge pipe depth, embedment, select fill and special backfill;

i) Method of noise control for each pump and/or generator;

j) Any temporary pipe supports and anchoring required;

k) Design plans and computation for access to bypass pumping locations indicated on the drawings;

l) Calculations for selection of bypass pumping pipe size;

m) Schedule for installation of and maintenance of bypass pumping lines;

b. Plan indicated selection location of bypass pumping line location

PART 2 – PRODUCTS

2.01 EQUIPMENT:

A. All pumps used shall be centrifugal self-priming units that do not require the use of foot-valves or Compressor in the priming system. The pumps shall be diesel or electric powered. Pumps shall have sound attenuation enclosure designed for operation at sound levels of 70 decibels and below. The Contractor is fully responsible for coordinating and obtaining temporary electrical service. All pumps used must be constructed to allow dry running for long periods of time to accommodate the cyclical nature of influent flows. The pumps shall not be hydraulic submersible type.

B. Provide the necessary stop/start control system for each pump. The control system shall remotely contact the contractor with notification of any problem. The contractor is responsible for responding within one (1) hour to the alarm and correcting the problem.

C. Discharge Piping – in order to prevent the accidental spillage of flows, all discharge systems shall be temporarily constructed of rigid pipe with positive, restrained joints.

D. Under no circumstances will aluminum “Irrigation” type piping and glued PVC pipe be allowed. Discharge hose will only be allowed in short sections and by specific permission from the ENGINEER. Provide piping materials of steel pipe, ductile iron pipe, or fused, high density polyethylene pipe.

2.02 MANUFACTURERS:

A. Acceptable manufacturers are listed below.

1. Thompson Pump & Manufacturing Co., Inc.

2. MWI Corporation

3. Or equal, must be approved by the ENGINEER

PART 3 – EXECUTION

3.01 PRECAUTIONS:

A. Be responsible for locating any existing utilities in the area selected for installing the bypass pipelines. Locate bypass pipelines to minimize any disturbance to existing utilities and obtain approval of the pipeline locations from the ENGINEER. All costs associated with relocating utilities and obtaining all approvals shall be included in the Contract Price.

B. Pumps and equipment shall be continuously monitored by a maintenance person capable of starting, stopping, refueling and maintaining these pumps during the construction. If pumping is required on a 24-hour basis, engines shall be equipped in a manner to keep noise to a minimum.

3.02 INSTALLATION AND REMOVAL:

A. Make connections to the existing wastewater pipe lines and construct temporary bypass pumping structures only at the access location indicated on the drawings and as may be required to provide adequate suction conduit.

B. Plugging or blocking of wastewater flows shall incorporate a primary and secondary plugging device. When plugging or blocking is no longer needed for performance and acceptance or work, it is to be removed in a manner that permits the wastewater flow to slowly return to normal without surge, to prevent surcharging or causing other major disturbances downstream.

C. The installation of the bypass pipelines is prohibited in above ground areas. The pipeline must be located off streets and sidewalks and on shoulder of the roads. When the bypass pipeline crosses local streets and private driveways, place the bypass pipelines in trenches and cover with temporary pavement. Upon completion of the bypass pumping operations, and after the receipt of written permission from the ENGINEER, remove all the piping, restore all property to pre-construction condition and restore all

pavement. Be responsible for obtaining any approvals for placement of the temporary pipeline within public ways from the City.

3.03 FIELD QUALITY CONTROL AND MAINTENANCE:

A. Testing: Perform leakage and pressure tests of the bypass pumping discharge piping using clean water prior to actual operation. Test the piping at a test pressure of 50 psi. Provide 24 hours notice to the ENGINEER prior to testing.

B. Bypass system shall be operational for 48-hour period prior to dismantling existing station. Acceptance shall be given by CITY. Any failure of bypass system to meet specified pumping requirements will involve the re-testing of the units at the CONTRACTOR'S expense. Bypass system shall remain on site for 7 days after the start-up of lift station is complete to ensure that lift station performance is satisfactory to the Engineer and the City of Coral Gables.

C. Inspection: Inspect bypass pumping system as needed to ensure that the system is working correctly.

D. Maintenance Service: Insure that the temporary pumping system is properly maintained and a responsible operator is on hand at all times when pumps are operating.

E. Extra Materials:

1. Spare parts for pumps and piping shall be kept on site as required.

2. Adequate hoisting equipment for each pump and accessories shall be maintained on the site.

- - END OF SECTION - -

SECTION 02222 - EXCAVATION AND BACKFILL FOR UTILITIES

PART 1 – GENERAL

1.01 WORK INCLUDED

A. Excavate, grade and backfill as required for the site underground piping systems, as shown on the Drawings and specified herein.

1.02 RELATED WORK SPECIFIED ELSEWHERE

A. Piping, General

B. Cast-in-Place Concrete

1.03 SUBMITTALS

A. General: Submit information and samples to the CITY for review.

B. Dewatering: The CONTRACTOR shall submit to the CITY its proposed methods of handling trench water and the locations at which the water will be disposed of. Methods shall be acceptable to the CITY before starting the excavation.

C. Bedding and Backfill Materials: The CONTRACTOR shall notify the CITY of the off site sources of bedding and backfill materials, and if required, submit to the CITY a representative sample weighing approximately 50 lbs.

D. Sheeting System: Drawings of any proposed sheeting system and design computations shall be submitted to the CITY; however, the review of these Drawings shall in no way relieve the CONTRACTOR of the responsibility to provide a safe and satisfactory sheeting and shoring system. Sheeting and shoring shall be designed by the CONTRACTOR, and the proposed design shall be sealed by a Professional ENGINEER registered in the State of Florida. If the CITY is of the opinion that at any point sufficient or proper supports have not been provided, it may order additional supports put in at the CONTRACTOR's expense.

1.04 QUALITY CONTROL

A. An independent testing laboratory will be retained by the CITY to do appropriate testing. The CONTRACTOR shall schedule its Work so as to permit a reasonable time for testing before placing succeeding lifts and shall keep the laboratory informed of its progress.

1.05 GROUNDWATER

A. The CONTRACTOR shall be responsible for anticipating groundwater conditions and shall provide positive control measures as required. Such measures shall ensure stability of excavations, groundwater pressure control, prevention of tanks, pipes, and other structures from being lifted by hydrostatic pressures, and avoiding the disturbance of subgrade bearing materials.

1.06 TRENCH SAFETY ACT COMPLIANCE

A. The CONTRACTOR by signing and executing the contract is, in writing, assuring that he will perform any trench excavation in accordance with the Florida Trench Safety Act, Section 553.60 et. seq.. The CONTRACTOR further identified the need for compliance with applicable trench safety standards as required by the Measurement and Payment Section and the pertinent proposal item. The CONTRACTOR acknowledges that this cost is included in the Total Base Bid Amount.

B. The CONTRACTOR is, and the CITY is not, responsible to review or assess the CONTRACTOR's safety precautions, programs or costs, or the means, methods, techniques or technique adequacy, reasonableness of cost, sequences or procedures of any safety precaution, program or cost, including but not limited to, compliance with any and all requirements of Florida Statute Section 553.60 et. seq. cited as the "Trench Safety Act". The CONTRACTOR is, and the CITY is not, responsible to determine if any safety or safety related standards apply to the project, including but not limited to, the "Trench Safety Act".

1.07 PROTECTION OF PROPERTY AND STRUCTURES

A. The CONTRACTOR shall, at its own expense, sustain in place and protect from direct or indirect injury, all pipes, poles, conduits, walls, buildings, and all other structures, utilities, and property in the vicinity of its work. Such sustaining shall be done by the CONTRACTOR. The CONTRACTOR shall take all risks attending the presence or proximity of pipes, poles, conduits, walls, buildings, and all other structures, utilities, and property in the vicinity of its work. Such sustaining shall be done by the CONTRACTOR. The CONTRACTOR shall take all risks attending the presence or proximity of pipes, poles, conduits, walls, buildings, and all other structures, utilities, and property in the vicinity of its work. He shall be responsible for all damage, and assume all expenses, for direct or indirect injury and damage, caused by its work, to any such pipe, structures, etc., or to any person or property, by reason of injury to them, whether or not such structures, etc., are shown on the Drawings.

B. Barriers shall be placed at each end of all excavations and at such places as may be necessary along excavations to warn all pedestrian and vehicular traffic of such excavations. Barricades with flashing lights shall also be placed along excavation from sunset each day to sunrise of the next day until such excavation is entirely refilled, compacted, and paved. All excavations shall be barricaded where required to meet OSHA, local and Federal Code requirements, in such a manner to prevent persons from falling or walking into any excavation within working area.

PART 2 – PRODUCTS

2.01 MATERIALS

A. General: Materials shall be furnished as required from on-site excavations or from acceptable off site sources as required. The CONTRACTOR shall notify the CITY of the sources of each material at least ten calendar days prior to the anticipated use of the materials.

B. Pipe Bedding: In general, clean sandy excavated material, that is free from organics, clay and construction debris, can be used as pipe bedding when construction is in a dry condition

and when the bedding is not sided by muck. Pipe bedding material shall be able to pass through a 3/4-inch sieve. Separation of suitable material for pipe bedding from other material shall be made during the excavation.

C. Screened gravel shall be used for small diameter (less than 24") and plastic pipe bedding when either the trench is within the water table or when the bedding is sided by muck or muck like material. Screened gravel shall consist of hard, durable particles of proper size and graduation, and shall be free from organic material, wood, trash, sand, loam, clay, excess fines, and other deleterious materials. The gravel shall be graded within the following limits:

Sieve Size	Percent Finer by Weight
1 inch	100
3/4 inch	99
1/2 inch	65
No. 4	2

D. Crushed stone shall be used for bedding of 24-inch and larger diameter pipe as detailed and at other locations indicated on the Drawings. Crushed stone shall be used when either side of the trench is within the water table or is sided by muck or muck like materials. Crushed stone shall consist of hard, durable, subangular particles of proper size and graduation, and clay, excess fines, and other deleterious materials. The stone shall be graded within the following limits:

Sieve Size	Percent Finer by Weight
5/8 inch	100
1/2 inch	40 – 100
3/8 inch	15 - 45
No. 10	0 - 5

E. Sand for bedding polyvinyl chloride pipe shall be a dry screened sand. Sand shall be graded sand with 100 percent passing a 3/8 inch sieve and not more than 5 percent passing a No. 200 sieve.

F. Backfill: In general, clean sandy excavated material, that is free from organics clay and construction debris can be used for backfill material. All material to be used as selected backfill shall be able to pass a 3/4-inch sieve. If, in the CITY's opinion, excavation material is unsuitable for backfill purposes, imported material having a sand equivalent value of not less than 20 percent shall be used for this portion of the trench backfill. All backfill material (placed above select backfill) shall be able to pass through a 6 inch ring. If suitable backfill is not available from the excavations, it shall be obtained from off site sources.

G. Unsuitable Fill Material: Classified as A-2-4, A-2-5, A-2-6, A-2-7, A-4, A-5, A-6, A-7, and A-8 in accordance with AASHTO Designation M 146. Also, highly organic soils (peat or muck) weak silty materials, asphalt and concrete are unsuitable fill material.

PART 3 – EXECUTION

3.01 EXCAVATION

A. The CONTRACTOR shall perform all excavation of every description and of whatever substance encountered, to the dimensions, grades and depths shown on the Drawings, or as directed. All excavations shall be made by open cut. All existing utilities such as pipes, poles and structures shall be carefully located, supported and protected from injury; in case of damage, they shall be restored at the CONTRACTOR's expense.

B. Pipe trenches for piping shall be excavated to a width within the limits of the top of the pipe and the trench bottom so as to provide a clearance on each side of the pipe barrel, measured to the face of the excavation, or sheeting if used, of 8 inches to 12 inches. Where the pipe size exceeds 12 inches, the clearance shall be from 12 inches to 18 inches. All pipe trenches shall be excavated to a level where suitable material is reached, a minimum of 8 inches below the excavated depth that will allow for a minimum of 36" of covering unless otherwise indicated on the Drawings. Excavation depths in other types of materials and conditions shall be made as hereinafter specified.

C. In areas where trench widths are not limited by right-of-way and/or easement widths, property line restrictions, existing adjacent improvements, including pavements, structures and other utilities, and maintenance of traffic, the trench sides may be sloped to a stable angle of repose of the excavated material but only from a point one foot above the crown of the pipe. A substantially and safely constructed movable shield, "box" or "mule" may be used in place of sheeting when the trench is opened immediately ahead of the shield and closed immediately behind the shield as pipe laying proceeds inside the shield.

D. Ladders or steps shall be provided for and used by workmen to enter and leave trenches.

E. Excavation for appurtenances shall be sufficient to provide a clearance between their outer surfaces and the face of the excavation or sheeting, if used, of not less than 12 inches.

F. Excavated unsuitable material shall be removed from the site and disposed of by the CONTRACTOR. Materials removed from the trenches shall be stored and in such a manner that will not interfere unduly with CITY operations, traffic on public roadways and sidewalks and shall not be placed on private property. In congested areas, such materials that cannot be stored adjacent to the trench or used immediately as backfill shall be removed to other convenient places of storage acceptable to the CITY at the CONTRACTOR's expense.

G. Excavated material that is suitable for use as backfill shall be used in areas where sufficient material is not available from the excavation. Suitable material in excess of backfill requirements shall be used on the site as directed by the CITY, or removed at CONTRACTOR’s expense.

3.02 SHEETING AND BRACING

A. The CONTRACTOR shall furnish, place and maintain sheeting and bracing to support sides of the excavation as necessary to provide safe working conditions in accordance with OSHA requirements, and to protect pipes, structures and other Work from possible damage. Where wood sheeting or certain designs of steel sheeting are used, the sheeting shall be cut off at a level of 2 feet above the top of the installed pipe and that portion below the level shall be left in place. If interlocking steel sheeting is used, it may be removed providing removal

can be accomplished without disturbing the bedding, pipe or alignment of the pipe. Any damage to the pipe bedding, pipe or alignment of the constructed utility caused by the removal of sheeting shall be cause for rejection of the affected portion of the work. The CITY may permit sheeting to be left in place at the request and expense of the CONTRACTOR.

B. If the CITY is of the opinion that at any point sufficient or proper supports, have not be provided, he may order additional supports put in at the CONTRACTOR's expense. The CONTRACTOR shall be responsible for the adequacy of all sheeting used and for all damage resulting from sheeting and bracing failure or from placing, maintaining and removing it.

3.03 REMOVAL OF WATER

A. General: It is a basic requirement of these Specifications that excavations shall be free from water before pipe or structures are installed.

B. The CONTRACTOR shall provide pumps, and other appurtenant equipment necessary to remove and maintain water at such a level as to permit construction in a dry condition. The CONTRACTOR shall continue dewatering operations until backfilling has progressed to a sufficient depth over the pipe to prevent flotation or movement of the pipe in the trench or so that it is above the water table. If at any point during the dewatering operation it is determined that fine material is being removed from the excavation sidewalls, the dewatering operation shall be stopped if acceptable to the CITY. If any of the subgrade or underlying material is disturbed by movement of groundwater, surface water, or any other reason, it shall be replaced at the CONTRACTOR's expense with crushed stone or gravel.

C. The CONTRACTOR shall use dewatering systems that include automatic starting devices, and standby pumps that will ensure continuous dewatering in the event of an outage of one or more pumps.

D. Disposal: Water from the trenches and excavation shall be disposed of in such a manner as will not cause injury to public health, to public or private property, to the Work completed or in progress, to the surface of the streets, cause any interference with the use of the same by the public, or cause pollution of any waterway or stream. The CONTRACTOR shall submit its proposed methods of handling trench water and locations at which the water will be disposed of to the CITY for review and shall receive acceptance before starting the excavation. Disposal to any surface water body will require silt screens to prevent any degration in the water body. Additionally, the CONTRACTOR shall be responsible for obtaining all necessary dewatering permits.

3.04 TRENCH STABILIZATION

A. No claim for extra work or additional payment will be considered for cost incurred in the stabilization of trench bottoms which are rendered soft or unstable as a result of construction methods, such as improper or inadequate sheeting, dewatering or other causes. In no event shall pipe be installed when such conditions exist and the CONTRACTOR shall correct such conditions so as to provide proper bedding or foundations for the proposed installation at no additional cost to the CITY before placing the pipe or structures.

3.05 PIPE BEDDING

A. Pipe trenches shall be excavated as described in Article 3.01. The resulting excavation shall be backfilled with acceptable pipe bedding material, up to the level of the centerline of the proposed pipe barrel. This backfill shall be tamped and compacted to provide a proper bedding for the pipe and shall then be shaped to receive the pipe. Bedding shall be provided under the branch of all fittings to furnish adequate support and bearing under the fitting.

B. Any excavation below the levels required for installation of the pipe bedding shall be backfilled with acceptable bedding material, tamped, compacted and shaped to provide proper support for the proposed pipe, at the CONTRACTOR's expense.

3.06 BACKFILL

A. Pipelines: Pipeline trenches shall be backfilled to a level 12 inches above the top of the pipe with select backfill obtained from the excavation. Such material shall be placed in 6 inch layers; each compacted to the densities specified in Article 3.07. Only hand operated mechanical compacting equipment shall be used within six inches of the installed pipe.

B. After the initial portion of backfill has been placed as specified above, and after all excess water has completely drained from the trench, backfilling of the remainder of the trench may proceed. The remainder of the backfill shall be selected material obtained from the excavation and shall be placed in horizontal layers, the depth of which shall not exceed the ability of the compaction equipment employed, and in no event shall exceed a depth of 12 inches. Each layer shall be moistened, tamped, puddled, rolled or compacted to the densities specified in Article 3.07.

C. Manholes and Vaults: Any excavation below the levels required for the proper construction of manholes or vaults shall be filled with Class B Concrete. The use of earth, rock, sand or other materials for this purpose will not be permitted.

3.07 COMPACTION AND DENSITIES

A. Compaction of backfill shall be 98 percent of the maximum density where the trench is located under structures or paved areas, and 95 percent of the maximum density elsewhere. More thorough compaction may be required when Work is performed in other regulatory agencies jurisdictions, such as the DOT. Methods of control and testing of backfill construction are:

1. Maximum density of the material in trenches shall be determined by ASTM D 1557.

2. Field density of the backfill material in place shall be determined by ASTM D 1556 or D 2922.

B. Testing: Laboratory and field density tests, which in the opinion of the CITY are necessary to establish compliance with the compaction requirements of these Specifications, shall be ordered by the CITY. The CONTRACTOR shall coordinate and cooperate with the testing laboratory. The testing program will be implemented by the CITY establishing depths and locations of tests. Modifications to the program will be made as job conditions change.

C. Trench backfill which does not comply with the specified densities, as indicated by such tests, shall be reworked and recompacted until the required compaction is secured, at no additional cost to the CITY. The costs for retesting such Work shall be paid for by the CONTRACTOR. Retesting of areas which do not comply with the specified densities shall be performed by the testing laboratory which tested the failed samples.

3.08 ADDITIONAL EXCAVATION AND BACKFILL

A. Where organic material, such as roots, muck, or other vegetable matter, or other material which, in the opinion of the CITY, will result in unsatisfactory foundation conditions, is encountered below the level of the proposed pipe bedding material, it shall be removed to a depth of two feet below the outside bottom of the pipe or to a greater depths as directed by the ENGINEER and removed from the site. Sheeting shall be installed if necessary to maintain pipe trenches within the limits identified by the CITY. The resulting excavation shall be backfilled with suitable backfill material, placed in 12 inch layers, tamped and compacted up to the level of the bottom of the proposed pipe bedding material. Sufficient compaction of this material shall be performed to protect the proposed pipe against settlement. Construction shall then proceed in accordance with the provisions of Article 3.05 "Pipe Bedding".

B. Additional excavation (more than two feet below the pipe) as indicated on the trench detail shall be performed only when ordered by the CITY. Where organic or other material is encountered in the excavation, the CONTRACTOR shall bring the condition to the attention of the CITY and obtain its determination as to whether or not the material will require removal, prior to preparing the pipe bedding. The excavation of material up to a depth of two feet below the outside bottom of the pipe is an incidental item of construction and the Work shall be done at the CONTRACTOR's expense. Where ordered by the CITY, the additional excavation, backfill and additional sheeting, if required, shall be paid as additional work.

C. Dispose of unsuitable topsoil and excavated material for site grading from the site. All excavated material is the property of the CITY and shall be disposed of as directed by the CITY. Unsuitable top soil and excavated material shall be classified as A-2-4, A-2-5, A-2-6, A-2-7, A-4, A-5, A-6, A-7, and A-8 in accordance with AASHTO Designation M 145. Unsuitable fill materials shall be disposed of by the CONTRACTOR at no additional cost to the CITY.

- END OF SECTION -

SECTION 02224 - EXCAVATION AND BACKFILL FOR STRUCTURES

PART 1 – GENERAL

1.01 SCOPE OF WORK

A. Furnish all labor, equipment and materials required to complete all work associated with excavation, backfill and compaction under structures required for a complete installation as shown on the Plans and specified herein.

B. All excavations shall be in conformity with the lines, grades, and cross sections shown on the Drawings or established by the Engineer.

C. It is the intent of this Specification that the Contractor conduct the construction activities in such a manner that erosion of disturbed areas and off-site sedimentation be absolutely minimized.

1.02 RELATED WORK

A. Section 03300 - Cast-in-Place Concrete

B. Section 02222 - Excavation and Backfill for Utilities

1.03 REFERENCE SPECIFICATIONS, CODES, AND STANDARDS

A. Without limiting the generality of the other requirements of the Specifications, all work herein shall conform to the applicable requirements of the following documents. All referenced Specifications, codes, and standards refer to the most current issue available at the time of Bid.

1. Florida Department of Transportation Standard Specifications for Road and Bridge Construction, latest edition.

2. American Society for Testing and Materials (ASTM):

ASTM C 127	Test for Specific Gravity and Absorption of Coarse Aggregate.
ASTM C 136	Test for Sieve Analysis of Fine and Coarse Aggregates.
ASTM D 422	Particle Size Analysis of Soils.
ASTM D 423	Test for Liquid Limit of Soils.
ASTM D 424	Test for Plastic Limit and Plasticity Index of Soils.
ASTM C 535	Test for Resistance to Degradation of Large Size Coarse Aggregate by Abrasion and Impact in the Los Angeles Machine.
ASTM D 698	Standard Method of Test for the Moisture - Density Relations of Soils Using a 5.5 lb. (2.5 kg) Rammer and a 12-inch (305 mm) Drop.

ASTM D1556	Test for Density of Soil in Place by the Sand-Cone Method.
ASTM D1557	Test for Moisture-Density Relations of Soils and Soil Aggregate Mixtures Using 10-lbs. (4.5 kg) Rammer and 18-inch (457 mm) Drop.
ASTM D2049	Test Method for Relative Density of Cohesionless Soils.
ASTM D2167	Test for Density of Soil in Place by the Rubber-Balloon Method.
ASTM D2216	Test for Laboratory Determination of Water (Moisture) Content of Soil, Rock, and Soil Aggregate Mixtures.
ASTM D2487	Test for Classification of Soils for Engineering Purposes.
ASTM D6938	Standard Test Method for In-Place Density and Water Content of Soil and Soil-Aggregate by Nuclear Methods (Shallow Depth).

1.04 SUBSURFACE CONDITIONS

A. Information on subsurface conditions is referenced under Division 1, General Requirements.

B. A Separate geotechnical report is included as an Appendix as a reference for information purposes. The report identifies properties below grade and also offer recommendations for foundation design, primarily for use of the Engineer. The recommendations shall not be construed as requirements of the Contract unless specifically referenced by the Contract Documents.

C. The Owner and/or the Engineer will not assume responsibility for variations of sub-soil quality or conditions at locations other than places shown and at the time the geotechnical investigation was made.

D. The Contractor shall satisfy himself as to the character and amount of different soil materials, groundwater and the subsurface conditions to be encountered in the work to be performed. Information and data, when furnished, are for the Contractor's general information. However, it is expressly understood that any interpretation or conclusion drawn there from is totally the responsibility of the Contractor. Engineer and Owner assume no liability for the accurateness of the data reported. No claim for extra compensation or for extension of time will be allowed on account of subsurface conditions inconsistent with Contractor’s assumptions.

E. Attention is directed to the fact that the Contractor may encounter limestone formation during excavation.

F. Attention is directed to the fact that there may be water pipes, storm drains and other utilities located in the area of proposed excavation. Locate existing underground utilities in areas of work. Test pits and hand excavation in critical areas will be required prior to initiating work. Perform all repairs to same in the event that excavation activities disrupt service.

G. All existing utilities including piping, electrical conduits, electrical duct banks and telephone cables that are shown on the Contract Documents to be relocated, shall be relocated prior to initiating earthwork. Excavation and backfill for relocation of existing utilities shall conform to the requirements of Section 02222 entitled "Excavation and Backfill for Utilities". The Contractor shall coordinate relocation of utilities with utility companies having jurisdiction in the area. Should unknown or incorrectly identified piping or other utilities be encountered during excavation, the Contractor shall consult the Owner and the Engineer immediately for directions.

H. The Contractor shall cooperate with the Owner and utility companies in keeping respective services and facilities in operation.

1.05 SUBMITTALS

A. General: Submit information and samples as specified herein to the Engineer for review in accordance with the Section 01300 - Submittals.

B. Sheeting System: Plans of the sheeting system and design computations shall be submitted to the Engineer prior to commencement of construction activity at the affected work. However, the review of these plans shall in no way relieve the Contractor of the responsibility to provide a safe and satisfactory sheeting and shoring system. Sheeting and shoring shall be designed by the Contractor, and the proposed design shall be sealed by a Professional Engineer registered in the State of Florida. If the Engineer is of the opinion that at any point sufficient or proper supports have not been provided, it may order additional supports to be put in at the Contractor's expense.

C. Dewatering: It is the intent of this Contract to perform excavation and backfill without dewatering. If dewatering is required, the Contractor shall submit its proposed methods of handling ground water and the locations at which the water will be disposed of. The Contractor retains unit responsibility for requiring all necessary permits and meeting all local regulatory agency requirements prior to the start of the excavation.

D. Structural Fill and Backfill Materials: The Contractor shall notify the Engineer of sources of backfill materials and submit to the Engineer the grain size distribution, moisture retaining properties of the proposed fill.

E. Required Procedures

1. Obtain all necessary permits for its dewatering activities from the jurisdictional agencies including, but not limited to the South Florida Water Management District, DERM as applicable. Submit copies of permits to the Engineer.

1.06 QUALITY CONTROL

A. An independent testing laboratory will be retained by THE CITY to do appropriate testing as described in Section 01400 - Quality Control. The Contractor shall schedule its Work so as to permit a reasonable time for testing before placing succeeding lifts and shall keep the laboratory informed of its progress.

1.07 JOB CONDITIONS

A. The Contractor shall ascertain as to the character and amount of different soil materials, groundwater and the subsurface conditions to be encountered in the Work to be performed. Information and data, when furnished, are for the Contractor's general information. However, it is expressly understood that any interpretation or conclusion drawn therefrom is totally the responsibility of the Contractor. Engineer and THE CITY assume no liability for the accuracy of the data reported.

B. The Contractor shall note that previous subsurface investigations have indicated that ground water is encountered at an elevation of approximately EL 2.50 ±. Actual water table levels may fluctuate during construction.

1.08 GROUNDWATER

A. The Contractor shall be responsible for anticipating groundwater conditions and shall provide positive control measures as required. Such measures shall ensure stability of excavations, groundwater pressure control, prevention of tanks, pipes, and other structures from being lifted by hydrostatic pressures, and avoiding the disturbance of subgrade bearing materials.

1.09 PROHIBITION OF BLASTING

A. The use of explosives for excavation Work is strictly prohibited on this project.

1.10 PROTECTION OF PROPERTY AND STRUCTURES

A. The Contractor shall, at its own expense, sustain in place and protect from direct or indirect injury, all pipes, poles, conduits, walls, buildings, and all other structures, utilities, and property in the vicinity of its Work. Such sustaining shall be done by the Contractor. The Contractor shall take all risks attending the presence of proximity of pipes, poles, conduits, walls, buildings, and all other structures, utilities, and property in the vicinity of his Work. It shall be responsible for all damage, and assume all expenses, for direct or indirect injury and damage, caused by its Work, to any such pipe, structures, etc., or to any person or property, by reason of injury to them, whether or not such structures, etc., are shown on the Plans.

PART 2 – PRODUCTS

2.01 STRUCTURAL FILL MATERIAL

A. Soils from the excavations meeting requirements stipulated herein with the exceptions of topsoil and organic material may be used as select fill for backfilling, constructing embankments, reconstructing existing embankments, and as structural subgrade support. All fill material used for embankment construction shall be provided by the Contractor from any excess suitable on-site material or from offsite sources, all subject to review by the Engineer prior to use. The Contractor must determine the volume of material required for the site.

B. Select fill used for embankment construction shall be noncohesive, nonplastic, granular mixture of local sand and limerock, shall be free from vegetation, organic material or muck, and shall contain not more than 8 percent material by weight which passes the No. 200 sieve. Broken concrete shall not be used in the fill. Fill material for embankment construction containing limerock shall have sufficient sand to fill the voids in the limerock, and no individual rocks or pieces or hard material that will not pass a 6-inch diameter ring shall be used in the fill; except that the upper 4-inches of all backfill or fills shall not contain any rock or hard material that will not pass a 3-inch diameter ring

C. Select fill used for backfilling shall either be material as described in Paragraph B or a granular soil material with a maximum Plasticity Index (PI) of 6. Backfill against walls shall not contain any rock larger than ½-inches

D. Select fill used under structures (structural fill) shall be furnished from off-site or on-site sources as required. Structural fill material shall be clean sand or sand and rock free from vegetation, organic material, muck, or other deleterious matter. Not more than 10 percent by weight shall pass the No. 200 sieve and shall have a Unified Soil Classification System designation of GP, GW, GP-GM, GW-GM, SP, SW, SP-SM, or SW-SM. All rock shall pass through a 3-inch diameter ring. Broken Portland cement or asphaltic concrete will not be considered an acceptable fill material. Unsuitable Fill Material: Classified as A-2-4, A-2-5, A-2-6, A-2-7, A-4, A-5, A-6, A-7, and A-8 in accordance with AASHTO Designation M 145. Peat and other highly organic soils are also unsuitable as structural fill

E. Gravel Base: Washed coarse #67 aggregate for concrete with fines not more than five percent passing through the No. 200 sieve or FDOT #89 stone.

F. Regardless of material used as select fill, materials shall be compacted at a moisture content satisfactory to the Engineer, which shall be approximately that required to produce the maximum density except that the moisture content shall not be more than 2% below nor more than 2% above the optimum moisture content for the particular material tested in accordance with the ASTM D1557

2.02 CLEAN SAND

A. Clean sand for use in backfilling shall be furnished from off-site or on-site sources as required. Material shall be clean sand free from vegetation, organic material, muck, or other deleterious material. Not more than 10 percent by weight shall pass the No. 200 sieve and shall have a classification of A-3 in accordance with AASHTO Designation M 145.

PART 3 – EXECUTION

3.01 SITE PREPARATION

A. Clear and grub all surface vegetation in accordance with Section 02100 – Clearing, Grubbing and Site Preparation an area equal to the building area plus a six foot margin from the exterior foundation lines. Remove all tree stumps, concentration of roots and other deleterious materials. Stockpile material suitable for ground cover. Stockpile usable topsoil for landscaped areas as directed by the Engineer.

3.02 REMOVAL OF UNSUITABLE MATERIAL

A. The Contractor shall remove and dispose of off-site all unsuitable materials. Within thirty (30) consecutive days after Notice to Proceed, the Contractor shall submit to the Engineer for review all required permits and a list of disposal sites for the unsuitable materials. If the disposal site is located on private property, the submittal shall also include written permission from the owner of record.

B. All unsuitable materials shall be disposed of in locations and under conditions that comply with federal, state and local laws and regulations.

C. The Contractor shall obtain an off-site disposal area prior to beginning demolition or excavation operations.

D. All excess and unsuitable materials shall be hauled in trucks of sufficient capacity and tight construction to prevent spillage. Trucks shall be covered to prevent the propagation of dust.

E. When all excess and unsuitable material disposal operations are completed, the Contractor shall leave the disposal sites in a condition acceptable to the Owner and Owner(s) of the disposal site(s).

3.03 EXCAVATION

A. Highly organic soils (peat or muck), weak silty materials, asphalt and concrete shall be removed from all foundation areas. In addition, all sandy silt zones shall be completely removed from mat foundation areas. Unsuitable material within structure footprints shall be over-excavated and backfilled with structural fill.

B. As a minimum, excavations shall be carried 5-feet outside slab or footing limits or by one foot for each foot excavated below the bearing grade of the mat or footing, whichever is less, unless noted otherwise.

C. All material excavated, regardless of its nature or composition, shall be classified as UNCLASSIFIED EXCAVATION. Excavation shall include the removal of all soil, rock, weathered rock, rocks of all types, boulders, conduits, pipe, and all other obstacles encountered and shown to be removed within the limits of excavation shown on the Drawings or specified herein. No additional payment will be made for the removal of obstacles encountered within the excavation limits shown on the Drawings and specified herein.

D. Excavated unsuitable material shall be removed from the site and disposed of by the Contractor.

E. All suitable material removed in the excavation shall be used as far as practicable in the formation of embankments, subgrades, and shoulders, and at such other places as may be indicated on the Drawings or indicated by the Engineer. No excavation shall be wasted except as may be permitted by the Engineer. The Contractor shall furnish off-site disposal areas for the unsuitable material and shall dispose of unsuitable material at such areas. Where suitable materials containing excessive moisture are encountered above grade in cuts, the Contractor shall construct above grade ditch drains prior to the

excavation of the cut material when in the opinion of the Engineer such measures are necessary to provide proper construction.

F. All excavations shall be made in the dry and in such a manner and to such widths as will give ample room for properly constructing and inspecting the structures and/or piping they are to contain and for such excavation support, pumping and drainage as may be required. Excavation shall be made in accordance with the grades and details shown on the Drawings and as specified herein.

G. Excavation slopes shall be flat enough to avoid slides that will cause disturbance of the subgrade or damage of adjacent areas. Excavation requirements and slopes shall be as indicated in the Drawings or as specified herein. The Contractor shall intercept and collect surface runoff both at the top and bottom of cut slopes. The intersection of slopes with natural ground surfaces, including the beginning and ending of cut slopes, shall be uniformly rounded as shown on the Drawings or as may be indicated by the Engineer. Concurrent with the excavation of cuts the Contractor shall construct intercepting berm ditches or earth berms along and on top of the cut slopes at locations shown on the Drawings or designated by the Engineer. All slopes shall be finished to reasonably uniform surfaces acceptable for seeding and mulching operations. No rock or boulders shall be left in place which protrude more than 1 foot within the typical section cut slope lines, and all rock cuts shall be cleaned of loose and overhanging material. All protruding roots and other objectionable vegetation shall be removed from slopes. The Contractor shall be required to submit plans of open-cut excavation for review by the Engineer before approval is given to proceed.

H. The bottom of all excavations for structures shall be examined by the Engineer for the presence of unsuitable material. If, in the opinion of the Engineer, additional excavation is required due to the in-place soils being soft, yielding, pumping and wet, the Contractor shall remove such material to the required width and depth and replace it with thoroughly compacted select fill, and/or crushed stone or screened gravel as indicated by the Engineer. No payment will be made for subgrade disturbance caused by inadequate dewatering or improper construction methods.

I. All cuts shall be brought to the grade and cross section shown on the Drawings, or established by the Engineer, prior to final inspection and acceptance by the Engineer.

J. Slides and overbreaks which occur due to negligence, carelessness or improper construction techniques on the part of the Contractor shall be removed and disposed of by the Contractor as indicated by the Engineer at no additional cost to the Owner. If grading operations are suspended for any reason whatsoever, partially completed cut and fill slopes shall be brought to the required slope and the work of seeding and mulching or other required erosion and sedimentation control operations shall be performed.

K. Where the excavation exposes sludge, sludge contaminated soil or other odorous materials, the Contractor shall cover such material at the end of each workday with a minimum of 6-inches and a maximum of 24-inches of clean fill. The work shall be an odor abatement measure and the material shall be placed to the depth deemed satisfactory by the Engineer for this purpose.

L. Where the bottom of the excavation exposes the limestone, Contractor shall over-excavate 12-inches and backfill with structural fill.

M. The Contractor shall ensure that its excavation work does not adversely affect the bearing capacity of the structural subsurface. Also, the Contractor shall proceed with foundation work immediately after excavation work and as expeditiously as possible so as to minimize any potential for subsurface disturbance due to environmental factors, adverse weather, etc. The Contractor shall also take all necessary precautions to protect its work from potential adverse impacts. Where excavated areas are disturbed by subsequent operations or adverse weather, scarify surface, reshape, fill as required and compact to required density.

3.04 UNAUTHORIZED EXCAVATION

A. Excavation Work carried outside of the Work limits required by the Contract Documents shall be at the Contractor's expense, and shall be backfilled by the Contractor at his own expense with suitable material, as directed by the Engineer. Where, in the judgment of the Engineer, such over-excavation requires use of lean concrete or crushed stone, the Contractor, at his expense shall furnish and place such materials.

3.05 EXCAVATION SUPPORT

A. The Contractor shall furnish, place, and maintain such excavation support which may be required to support sides of excavation or to protect pipes and structures from possible damage and to provide safe working conditions. Excavation for deep structures shall be sufficient to provide a clearance between their outer surfaces and the face of the excavation, excavation support, or bracing, of not less than 3 feet. Materials encountered in the excavation which have a tendency to slough or flow into the excavation, undermine the bank, weaken the overlying strata, or are otherwise rendered unstable by the excavation operation shall be retained by an excavation support, stabilization, grouting or other acceptable methods. If the Engineer is of the opinion that at any point sufficient or proper supports have not been provided, he may order additional supports put in at the expense of the Contractor. The Contractor shall be responsible for the adequacy of all supports used and for all damage resulting from failure of support system or from placing, maintaining and removing it.

B. Selection of and design of any proposed excavation support systems is exclusively the responsibility of the Contractor. Excavation support shall comply with all applicable OSHA requirements. Contractor shall submit drawings and calculations on proposed systems sealed by a Professional Engineer currently registered in the State of Florida.

C. The Contractor shall exercise caution in the installation and removal of supports to insure that excessive or unusual loadings are not transmitted to any new or existing structure. The Contractor shall promptly repair at his expense any and all damage that can be reasonably attributed to installation or removal of excavation support system.

D. Contractor shall monitor movement in the excavation support systems as well as movement at adjacent structures, utilities and roadways near excavation supports. Contractor shall submit a monitoring plan developed by the excavation support design engineer. All pre-construction condition assessment and documentation of adjacent structures on-site and off-site shall be performed by the Contractor. If any sign of distress such as cracking or movement occurs in any adjacent structure, utility or roadway during installation of supports, subsequent excavation, service period of supports, subsequent backfill and construction, or removal of supports, Engineer shall be

notified immediately. Contractor shall be exclusively responsible for any damage to any roadway, structure, utility, pipes, etc. both on-site and off-site, as a result of his operations.

E. All excavation supports shall be removed upon completion of the work except as indicated herein. The Engineer may permit supports to be left in place at the request and expense of the Contractor. Any excavation supports left in place shall be cut off at least two (2) feet below the finished ground surface or as directed by the Engineer.

3.06 PROTECTION OF SUBGRADE

A. To minimize the disturbance of bearing materials and provide a firm foundation, the Contractor shall comply with the following requirements:

1. Use of heavy rubber-tired construction equipment shall not be permitted on the final subgrade unless it can be demonstrated that drawdown of groundwater throughout the entire area of the structure is at least 3 feet below the bottom of the excavation (subgrade). Even then, the use of such equipment shall be prohibited should subgrade disturbance result from concentrated wheel loads.

2. Subgrade soils disturbed through the operations of the Contractor shall be excavated and replaced with compacted select fill or crushed stone at the Contractor's expense as indicated by the Engineer.

3.07 PROOFROLLING

A. Proof-rolling of in-place granular soils shall be performed on the subgrade of all structures and all areas that will support pavements or select fill. Surface area to be proof-rolled shall extend 5 feet out from the footing perimeter. After stripping of topsoil, excavation to subgrade and prior to placement of fills, the exposed subgrade shall be carefully inspected by probing and testing as needed. Any topsoil or other organic material still in place, frozen, wet, soft, or loose soil, and other undesirable materials shall be removed. Each section of subgrade wall be subjected to multiple, overlapping (minimum of 20 percent overlap) coverages of the compactor. Proof-rolling shall continue to check for pockets of soft material hidden beneath a thin crust of better soil and until no further vertical settlement of the surface is visually discernable. Any unsuitable materials thus exposed shall be removed and replaced with an approved compacted material. Groundwater shall be maintained at least 30 inches below the work area.

3.08 DEWATERING

A. The Contractor shall do all dewatering as required for the completion of the work. Procedures for dewatering proposed by the Contractor shall be submitted to the Engineer for review prior to any earthwork operations. Disposal of water to any surface water body will require silt screens. All water removed by dewatering operations shall be disposed of in accordance with the Florida Air and Water Pollution Control Act. The Contractor is responsible for obtaining any dewatering permits as required by regulatory agencies.

B. The dewatering system shall be of sufficient size and capacity as required to control groundwater or seepage to permit proper excavation operations, embankment construction and reconstruction, subgrade preparation, and to allow concrete to be placed in a dry condition except where authorized tremie concrete construction work is shown or permitted.. The system shall include a sump system or other equipment, appurtenances and other related earthwork necessary for the required control of water, and shall include automatic starting devices and standby pumps that will ensure continuous dewatering in the event of an outage of one or more pumps. The Contractor shall drawdown groundwater to at least 30 inches below the bottom of excavations (subgrade) at all times in order to maintain a dry and undisturbed condition. The groundwater level shall be controlled so as to permit the placing and curing of concrete and the maintenance of supporting foundations and adjacent work and structures. The Contractor is fully responsible for protecting structures from flotation until final acceptance of the work.

C. The Contractor shall control, by acceptable means, all water regardless of source. Water shall be controlled and its disposal provided for at each berm, structure, etc. The entire periphery of the excavation areas shall be ditched and diked to prevent water from entering the excavation. The Contractor shall be fully responsible for disposal of the water and shall provide all necessary means at no additional expense to the Owner. The Contractor shall be solely responsible for proper design, installation, proper operation, maintenance, and any failure of any component of the system.

D. The Contractor shall be responsible for and shall repair without cost to the Owner, any damage to work in place and the excavation, including damage to the bottom due to heave and including removal of material and pumping out of the excavated area. The Contractor shall be responsible for damages to any other area or structure caused by his failure to maintain and operate the dewatering system proposed and installed by the Contractor.

E. The Contractor shall take all the steps that he considers necessary to familiarize himself with the surface and subsurface site conditions, and shall obtain the data that is required to analyze the water and soil environment at the site and to assure that the materials used for the dewatering systems will not erode, deteriorate, or clog to the extent that the dewatering systems will not perform properly during the period of dewatering. Copies of logs of borings and laboratory test results are available to the Contractor. This data is furnished for information only, and it is expressly understood that the Owner and Engineer will not be held responsible for any interpretations or conclusions drawn therefrom by the Contractor.

F. Prior to the execution of the work, the Contractor, Owner and Engineer shall jointly survey the condition of adjoining structures. Photographs and records shall be made of any prior settlement or cracking of structures, pavements, and the like, that may become the subject of possible damage claims.

G. If a surface to receive foundation slabs cannot be maintained dry by the Contractor's dewatering efforts, the Contractor shall provide tremie seals at no additional cost to the Owner. The placement of tremie seals shall not preclude dewatering operations specified herein. The limits of tremie seals shall be recommended by the Contractor and reviewed and accepted by the Engineer.

3.09 BACKFILLING

A. All structures shall be backfilled with the type of materials shown on the Drawings and specified herein. Select fill shall be deposited in successive, uniform, approximately horizontal layers not exceeding 12-inches in loose lifts for the full width. Stones or fragmentary rock larger than 3-inches in their greatest dimension will not be allowed within the top 6-inches of the ground nor within 6 inches of pipes. No stone or fragmentary rock larger than 6-inches in their greatest dimension will be allowed for any portion of backfill. Compaction shall be in accordance with the requirements of Paragraph 3.10, COMPACTION.

B. Where excavation support is used, the Contractor shall take all reasonable measures to prevent loss of support beneath and adjacent to pipes and existing structures when supports are removed. If significant volumes of soil cannot be prevented from clinging to the extracted supports, the voids shall be continuously backfilled as rapidly as possible. The Contractor shall thereafter limit the depth below subgrade that supports will be installed in similar soil conditions or employ other appropriate means to prevent loss of support.

C. Backfill against concrete or masonry structure shall not be performed until the Work has been reviewed and backfilling permitted. Backfill against walls shall also be deferred until the structural slab for floors above the top fill line have been placed and attained design strength or earlier at the discretion of the Engineer. Partial backfilling against adequately braced wall may be considered by the Engineer on an individual situation basis. Where walls are to be waterproofed, all Work shall be completed and membrane materials dried or cured according to the manufacturer's instructions before backfilling.

3.10 COMPACTION

A. The Contractor shall compact backfill and in place subgrade in accordance with the requirements of this Section. The densities specified herein refer to percentages of maximum density as determined by the noted test methods. Compaction of materials on the project shall be in accordance with the following schedule:

	Density % Mod. Proctor (D1557)	**Max. Lift Thickness as Compacted Inches**
Embankments	92	8
Backfill Around Structures	98	6
Backfill Beneath Structures	98	6
Crushed Stone Beneath Structures	**	12
Select Sand	98	8
Crushed Stone Backfill	**	12
In place Subgrade Beneath Structures	98	6

* Backfill beneath structures shall be considered to include a zone 10 feet out from the foundation of the structure extending down to the natural ground on a 45° slope.

** The aggregate shall be compacted to a degree acceptable to the Engineer by use of a vibratory compactor and/or crawler tractor.

B. Compaction shall be conducted as follows:

1. Each section of subgrade shall be subjected to multiple, overlapping (minimum 20% overlap) coverages of the compactor as it operates at normal walking speed. Vibratory equipment shall not be used within 25 feet of any existing structure.

2. Within 25 feet of any existing structure, non-vibratory compaction equipment should be used. Within 5 feet of any existing structure, a walk behind vibratory sled or roller shall be used. A sufficient number of passes should be made within the construction area to compact the in-place soil as required in Article 3.10 A above.

C. Field density tests will be made by independent testing agency as described in Article 1.06. These tests shall be the basis for accepting or rejecting the compaction. In-place density tests will be performed in accordance with ASTM D 1556, ASTM D 2167, or ASTM D 6938. The Engineer will be the sole judge as to which test method will be the most appropriate. Failure to achieve the specified densities shall require the Contractor to re-compact the material or remove it as required. The Contractor shall, if necessary, increase his compactive effort by increasing the number of passes, using heavier or more suitable compaction equipment, or by reducing the thickness of the layers. The Contractor shall adjust the moisture contents of the soils to bring them within the optimum range by drying them or adding water as required.

D. Testing will be performed as frequently as deemed necessary by the Engineer. As a minimum, one in-place density test shall be performed for each 1000 cubic yards of embankment placed, 500 cubic yards of backfill placed, 2500 square feet of foundation area, or one test performed each day for either.

E. Final grades shall be within 0.1 foot of elevations shown. Where shown on the Drawings surfaces shall be sloped for drainage or other purposes.

F. Vibration monitoring shall be performed at nearby structures when compaction work is ongoing. A single monitoring point using vibration monitoring equipment capable of detecting velocities of 0.1 inch/second or less and survey measurements shall be used for vibration monitoring at each of the nearest structures. An elevation measurement on nearby structures shall be taken before compaction work starts, and then at least twice a day during the work with one reading taken at the conclusion of the day's operations. Elevation measurements shall be recorded to an accuracy of 0.001 foot. If at any time the Contractor detects settlement or heave of 0.005-feet or more, or vibration levels of 0.5 inch/second or more, the vibratory compaction shall be stopped immediately and the Engineer notified.

- END OF SECTION -

SECTION 02510 – ASPHALTIC CONCRETE PAVEMENT

PART 1 – GENERAL

1.01 WORK INCLUDED

A. Construct asphaltic concrete pavement in accordance with the lines, grades and typical section as indicated on the Drawings, specified herein and as required for a complete installation.

1.02 SUBMITTALS

A. The CONTRACTOR shall submit its proposed formula for the asphaltic concrete paving for review.

1.03 QUALITY CONTROL

A. The phrase "DOT Specifications" shall refer to the Florida Department of Transportation Standard Specifications for Road and Bridge Construction. The DOT Specifications, are referred to herein and are hereby made a part of this Contract to the extent of such references, and shall be as binding upon the Contract as through reproduced herein in their entirety.

PART 2 – PRODUCTS

2.01 MATERIALS

A. Limerock Base: The limerock base shall consist of two courses of Miami Oolite limerock in accordance with Sections 200 and 911 of the DOT Specifications.

B. Prime Coat: The material used for the prime coat shall be cut-back Asphalt Grade RC-70 conforming to Sections 300 and 916 of the DOT Specifications for prime to be used on Miami Oolite formation limerock.

C. Asphaltic Concrete: Type SP 9.5 only meeting the requirements in Section 334 of the DOT Specifications.

D. Reclaimed Asphalt: Reclaimed asphalt shall not be utilized.

E. Tack Coat: The material used for the tack coat shall be emulsified asphalt grade RS-2 conforming to DOT Sections 300 and 916.

PART 3 – EXECUTION

3.01 INSTALLATION

A. Subgrade: Roadway subgrades shall be stabilized to the minimum depth shown on the Drawings to a Limerock Bearing Ratio of not less than 40. Stabilizing shall be Type B as defined in Section 160 of the DOT Specifications. Stabilization may require the addition and thorough mixing in of crushed limerock, course limerock screenings, or any other stabilizing material acceptable to the CITY. The stabilizing material shall be applied in

such quantity that, after mixing and blending, the subgrade will have a LBR of not less than 40. Stabilizing material shall be mixed or blended in the subgrade material by plowing, scarifying, disking, harrowing, blading and mixing with rotary tillers until the mixed materials are of uniform bearing value throughout the width and depth of the layer being processed.

B. At least three density determinations shall be made on each day's final compaction operations on each course and the density determinations shall be made at more frequent intervals if deemed necessary by the CITY.

C. Limerock Base: The limerock base shall be constructed in accordance with Section 911 of the DOT Specifications, to the thickness and width indicated on the Drawings.

D. After spreading of the base material is completed, the entire surface shall be scarified and shaped so as to produce the exact grade and cross section after compaction. For double course base, this scarifying shall extend a depth sufficient to penetrate slightly the surface of the first course. The maximum depth of each lift shall be 8 inches.

E. When the material does not have the proper moisture content to insure the required density, wetting or drying shall be required. If the material is deficient in moisture, water will be added and uniformly mixed in by disking the base course to its full depth. If the material contains an excess of moisture, it shall be allowed to dry before being compacted. As soon as proper conditions of moisture are attained, the material shall be compacted to an average density not less than 98 percent maximum density as determined in more than one course, the density shall be obtained in each lift of the base.

F. During final compacting operations, if blading of any areas is necessary to obtain the true grade and cross section, the compacting operations for such areas shall be completed prior to making the density determination on the finished base.

G. Unless otherwise directed by the CITY, the surface shall be "hard-planed" with a blade grader immediately prior to the application of the prime coat to remove the thin glaze or cemented surface and to allow free penetration of the prime material. The materials planed from the base shall be removed from the base area.

H. If cracks or checks appear in the base, either before or after priming, which in the opinion of the CITY, would impair the structural efficiency of the base course, the CONTRACTOR shall remove such cracks or checks by rescarifying, reshaping, adding base material where necessary and recompacting, at no additional cost to the CITY.

I. Mixing Base and Subgrade: If at any time the subgrade material shall become mixed with the base course material, the CONTRACTOR shall, without additional compensation, dig out and remove the mixture, reshape and compact the subgrade and replace the materials removed with clean base material, which shall be shaped and compacted as specified above.

J. Prime Coat: The prime coat shall be applied at a rate of 0.15 gallons per square yard and the Work performed in accordance with Section 300 of the DOT Specifications.

K. Tack Coat: The tack coat shall be applied at a rate between 0.02 and 0.10 gallons per square yard and the Work performed in accordance with Section 300 of the DOT Specifications.

L. Asphaltic Concrete: The spreading, compacting and jointing the wearing surface shall be in accordance with Sections 330 and 331 of the DOT Specifications to the thickness indicated on the Drawings.

3.02 PAVEMENT REPAIR

A. All damage to pavement as a result of Work under this Contract shall be repaired in a manner satisfactory to the CITY and at no additional cost to the CITY. The repair shall include the preparation of the subgrade, the placing and compacting of the limerock base, the priming of the base, the placing and maintaining of the surface treatment, all as specified herein.

B. The width of all repairs shall extend at least 12 inches beyond the limit of the damage. The edge of the pavement to be left in place shall be cut to a true edge with a saw or other acceptable method so as to provide a clean edge to abut the repair. The line of the repair shall be reasonably uniform with no unnecessary irregularities.

- - END OF SECTION - -

SECTION 02526 - CONCRETE PAVEMENT, CURB AND WALKWAYS

PART 1 – GENERAL

1.01 THE REQUIREMENT

A. Concrete pavement, curbs and sidewalk shall be constructed to the lines and grades and dimensions required for a complete installation as shown on the Drawings and specified herein.

1.02 SUBMITTALS

A. Shop drawings for reinforcing, joint material and mix designs shall be submitted for review.

PART 2 – PRODUCTS

2.01 CONCRETE

A. Concrete shall be Class B, conforming to the Section entitled "Cast-in-Place Concrete", unless noted or specified otherwise.

2.02 REINFORCING AND WELDED WIRE FABRIC

A. Joint reinforcing and welded wire fabric shall conform to the Section entitled "Concrete Reinforcement".

2.03 JOINT SEALER FOR PAVEMENT

A. Joint sealer shall be a one or two part polysulfide base self leveling sealant for horizontal surfaces that has been developed for foot and vehicular traffic. The sealant shall conform to the requirements of the Section entitled "Sealants and Caulking".

2.04 PREFORMED JOINT FILLER

A. Preformed joint filler shall be sponge rubber and conform to the requirements of AASHTO Designated M148, Type 1.

PART 3 – EXECUTION

3.01 SUBGRADE CONDITION

A. The finished subgrade shall be maintained in a smooth, compact condition and any areas which are disturbed prior to placing of the concrete shall be restored at the CONTRACTOR's expense. The subgrade shall be moist at the time the concrete is placed. Water shall be uniformly applied ahead of the paving operations as directed by the CITY. If the CONTRACTOR does not maintain the subgrade in the required moist condition, a vapor barrier sheet will be required between the subgrade and the concrete.

B. The subgrade shall be accurately trimmed to the required elevation with a 1/4-inch tolerance. High areas shall be trimmed to proper elevation. Low areas may be filled with suitable material and compacted to the specified density or filled with concrete integrally with the placing of the pavement.

3.02 SETTING FORMS

A. The forms shall be accurately set to line and grade and such that they rest firmly, throughout their entire length upon the compacted subgrade surface. Forms shall be joined neatly and tightly and braces to test the pressure of the concrete and the finishing operations. The alignment and grade of all forms shall be approved before and immediately prior to the placing of concrete.

3.03 MIXING CONCRETE

A. Concrete shall be mixed in accordance with the Section entitled "Cast-in-place Concrete".

3.04 PLACING CONCRETE

A. The concrete shall be distributed on the subgrade to such depth, that, when it is consolidated and finished, the slab thickness required by the Drawings will be obtained at all points and the surface will at no point be below the grade specified for the finished surface, after application of the allowable tolerance. The concrete shall be deposited on the subgrade in a manner which will require as little re-handling as possible.

B. Fabric reinforcement shall be placed at mid slab depth, and the fabric shall be maintained at this location during the placing and finishing operations.

C. Concrete shall be thoroughly consolidated against and along the faces of all forms, by means of hand-operated, spud-type vibrators. Vibrators shall not be permitted to come in contact with the subgrade or a side form. Vibration at any one location shall not continue so long as to produce puddling or the accumulation of excessive grout on the surface. In no case shall the vibrator be operated longer than 15 seconds in any one location.

3.05 STRIKING-OFF, CONSOLIDATING AND FINISHING CONCRETE

A. Immediately after the placing, the concrete shall be struck off, consolidated and finished, to produce a finished pavement conforming to the cross section, width and surface sequence of operations shall be as follows: strike-off; vibratory consolidation; screeding; floating; removal of laitance; straight edging; and final surface finish.

3.06 STRAIGHT EDGING AND SURFACE CORRECTIONS

A. After floating has been completed and the excess water removed, but while the concrete is still in a plastic state, the surface of the concrete shall be tested for trueness with an accurate 10 foot straightedge. The straightedge shall be furnished by the CONTRACTOR. The straightedge shall be held in successive positions parallel to the road center line, in contact with the surface, and the whole area tested from one side of the slab to the other as necessary. Any depressions shall be immediately filled with

freshly mixed concrete and struck-off; consolidated and refinished. High areas shall be cut down and refinished. Straightedge testing and surface correction shall continue until the entire surface appears to conform to the required grade and cross section.

3.07 FINAL FINISH

A. As soon as the water sheen has disappeared from the surface of the pavement and just before the concrete becomes non-plastic, a light broom finish shall be given to the surface.

3.08 EDGING

A. After the final finish has been applied, but before the concrete has become non-plastic, the edges of the pavement along each side of the strip being placed, on each side of construction joints and along any structure extending into the pavement, shall be carefully rounded to a 1/4 inch radius except as otherwise indicated. A well-defined and continuous radius shall be produced and a smoother, dense mortar finish obtained. All concrete shall be completely removed from the top of the joint filler.

B. All joints shall be checked with a straightedge before the concrete has become non-plastic and, if one side of the joint is higher then the other or the entire joint is higher or lower then the adjacent slabs, corrections shall be made as necessary.

3.09 JOINTS

A. Construction Joints shall be located as shown on the Drawings.

B. Expansion Joints around Structures shall be formed by placing pre-molded expansion joint material about all structures and features projecting through, into or against the pavement. Unless otherwise indicated, such joints shall be ½ inch in width.

C. Open type transverse expansion joints shall be provided at all sidewalk returns and at 50 feet intervals and wherever indicated on the Drawings. Open type joints shall be formed by staking a 1/4 inch thick metal bulkhead in place and placing concrete on both sides. After the concrete has set sufficiently to preserve the width and shape of the joint, the bulkhead shall be removed. After the sidewalk has been finished over the joint, the slot shall be opened and edged with a tool having a ½ inch radius. Transverse expansion joints shall be cleaned and filled with joint filler strips 1/4 inch thick conforming to the requirements of AASHTO M-153.

D. Scored Joints shall be either formed or sawed at 5 foot intervals and shall extend to a depth of at least one fourth of the sidewalk slab thickness.

3.10 CURING

A. After the finishing operations have been completed and as soon as the concrete has hardened sufficiently that marring of the surface will not occur, the entire surface and the edges of the newly placed concrete shall be covered and cured with membrane curing compound.

B. Curing compound shall be uniformly applied to the surfaces to be cured, in a single coat, continuous film, at the rate of one gallon to not more than 200 square feet, by a mechanical sprayer.

C. Curing compound shall not be applied during periods of rainfall. Curing compound shall not be applied to the inside faces of joints to be sealed. Should the film become damaged form any cause within the required curing period, the damaged portions shall be repaired immediately with additional compound. Upon removal of side forms the sides of the slabs exposes shall immediately be coated to provide a curing treatment equal to that provided for the surface.

3.11 CURB AND SIDEWALK CONSTRUCTION

A. The concrete curbs and sidewalks shall be constructed on a prepared smooth subgrade of uniform density. Large boulders and other obstructions shall be removed to a minimum depth of 6 inches below the finished subgrade elevation and the space shall be backfilled with sand, base course material or other suitable material which shall be thoroughly compacted by rolling or tamping. The CONTRACTOR shall furnish a template and shall thoroughly check the subgrade prior to depositing concrete.

B. Concrete for curbs and sidewalks shall be formed, mixed, placed and finished in conformance with the requirements of other Articles of this Section, except as modified herein. Sidewalks shall be given a light broom finish.

- - END OF SECTION - -

SECTION 03100 – CONCRETE FORMWORK

PART 1 – GENERAL

1.01 SECTION INCLUDES

A. The CONTRACTOR shall furnish all materials for concrete formwork, bracing, and supports and shall design and construct all falsework, all in accordance with the provisions of the Contract Documents.

1.02 RESPONSIBILITY

A. The design and engineering of the formwork as well as safety considerations are the responsibility of the CONTRACTOR.

1.03 RELATED SECTIONS

A. Cast-in-Place Concrete.

B. Grout.

1.04 REFERENCES

A. Without limiting the generality of other requirements of these Specifications, all work specified herein shall conform to or exceed the requirements of the Building Code and the applicable requirements of the following documents to the extent that the provisions of such documents are not in conflict with the requirements of this Section.

1. Codes and Standards:

   a. The Building Code, as referenced herein, is the Florida Building Code.

2. Government Standards:

   a. PS 1U.S. Product Standard for Concrete Forms, Class I.

3. Commercial Standards:

   a. ACI 347-80Recommended Practice for Concrete Formwork.

   b. ACI 318RBuilding Code Requirements for Reinforced Concrete.

1.05 QUALITY ASSURANCE

A. Tolerances: The variation from established grade or lines shall not exceed 1/4 inch in 10 feet and there shall be no offsets or visible bulges or waviness in the finished surface. All tolerances shall be within the "Suggested Tolerances" specified in ACI 347. The CONTRACTOR shall grind smooth all fins and projections between formwork panels as directed by the CITY.

B. Curved forms shall be used for curved and circular structures. Straight panels will not be acceptable for forming curved structures.

PART 2 – PRODUCTS

2.01 FORM MATERIALS

A. Except as otherwise expressly accepted by the CITY, all lumber brought on the job site for use as forms, shoring, or bracing shall be new material. All forms shall be smooth surface forms and shall be of the following materials:

1. Footing sides-Construction grade Hem Fir or Douglas Fir

2. Walls-Steel or plywood panel

3. Columns-Steel, plywood or fiberglass

4. Roof and floor slabs-Plywood

5. All other work-Steel panels, plywood or tongue and groove lumber, or sheet piles as indicated.

B. Materials for concrete forms, formwork, and falsework shall conform to the following requirements:

1. Lumber shall be Southern Pine, construction grade or better, in conformance with U.S. Product Standard PS20.

2. Plywood for concrete formwork shall be new, waterproof, synthetic resin bonded, exterior type Douglas Fir or Southern Pine plywood manufactured especially for concrete formwork and shall conform to the requirements of PS I for Concrete Forms, Class I, and shall be edge sealed. Thickness shall be as required to support concrete at the rate it is placed, but not less than 5/8 inch thick.

2.02 PREFABRICATED FORMS

A. Form materials shall be metal, wood, plywood, or other acceptable material that will not adversely affect the concrete and will facilitate placement of concrete to the shape, form, line, and grade indicated. Metal forms shall be an acceptable type that will accomplish such results. Wood forms for surfaces to be painted shall be Medium Density Overlaid plywood, MDO Ext. Grade.

2.03 FORMWORK ACCESSORIES

A. Unless otherwise shown, exterior corners in concrete members shall be provided with 3/4 inch chamfers. Re-entrant corners in concrete members shall not have fillets unless otherwise shown.

B. Form ties shall be provided with a plastic cone or other suitable means for forming a conical hole to insure that the form tie may be broken off back of the face of the concrete. The maximum diameter of removable cones for rod ties, or of other removable form tie fasteners

having a circular cross section, shall not exceed 1 1/2 inches; and all such fasteners shall be such as to leave holes of regular shape for reaming.

C. Form ties for water-retaining structures shall have integral waterstops. Removable taper ties may be used when acceptable to the CITY. A preformed neoprene or polyurethane tapered plug sized to seat at the center of the wall shall be inserted in the hole left by the removal of the taper tie.

D. Form release agent shall be a blend of natural and synthetic chemicals that employs a chemical reaction to provide quick, easy and clean release of concrete from forms. It shall not stain the concrete and shall leave the concrete with a paintable surface. Formulation of the form release agent shall be such that it would minimize formation of "Bug Holes" in cast-in-place concrete.

PART 3 – EXECUTION

3.01 EXAMINATION

A. Forms to confine the concrete and shape it to the required lines shall be used wherever necessary. The CONTRACTOR shall assume full responsibility for the adequate design of all forms, and any forms which are unsafe or inadequate in any respect shall promptly be removed from the Work and replaced at the CONTRACTOR's expense. A sufficient number of forms of each kind shall be provided to permit the required rate of progress to be maintained. The design and inspection of concrete forms and falsework, shall comply with applicable local, state and Federal regulations. Plumb and string lines shall be installed before concrete placement and shall be maintained during placement. Such lines shall be used by CONTRACTOR's personnel and by the CITY and shall be in sufficient number and properly installed. During concrete placement, the CONTRACTOR shall continually monitor plumb and string line form positions and immediately correct deficiencies.

B. Concrete forms shall conform to the shape, lines, and dimensions of members as called for on the Drawings, and shall be substantially, free from surface defects, and sufficiently tight to prevent leakage. Forms shall be properly braced or tied together to maintain their position and shape under a load of freshly placed concrete.

C. All forms shall be true in every respect to the required shape and size, shall conform to the established alignment and grade, and shall be of sufficient strength and rigidity to maintain their position and shape under the loads and operations incident to placing and vibrating the concrete. Suitable and effective means shall be provided on all forms for holding adjacent edges and ends of panels and sections tightly together and in accurate alignment so as to prevent the formation of ridges, fins, offsets, or similar surface defects in the finished concrete. Plywood, 5/8 inch and greater in thickness, may be fastened directly to studding if the studs are spaced close enough to prevent visible deflection marks in the concrete. The forms shall be tight so as to prevent the loss of water, cement and fines during placing and vibrating of the concrete. Specifically, the bottom of wall forms that rest on concrete footings or slabs shall be provided with a gasket to prevent loss of fines and paste during placement and vibration of concrete. Such gasket may be a 1 to 1 1/2 inch diameter polyethylene rod held in position to the underside of the wall form. Adequate clean out holes shall be provided at the bottom of each lift of forms. The size, number, and location of such clean outs shall be as acceptable to the CITY.

D. Concrete construction joints will not be permitted at locations other than those shown or specified, except as may be acceptable to the CITY. When a second lift is placed on hardened concrete, special precautions shall be taken in the way of the number, location, and tightening of ties at the top of the old lift and bottom of the new to prevent any unsatisfactory effect whatsoever on the concrete. Pipe stubs and anchor bolts shall be set in the forms where required.

3.02 EARTH FORMS

A. All vertical surfaces of concrete members shall be formed, except where placement of the concrete against the ground is called for on the Drawings. Not less than 1 inch of concrete shall be added to the thickness of the concrete member as shown where concrete is permitted to be placed against trimmed ground in lieu of forms. Such permission will be granted only for members of comparatively limited height and where the character of the ground is such that it can be trimmed to the required lines and will stand securely without caving or sloughing until the concrete has been placed.

3.03 FOOTINGS, SLAB EDGES AND GRADE BEAMS

A. Provide wood side forms for all footings, slab edges and grade beams.

3.04 APPLICATION - FORM RELEASE AGENT

A. Apply form release agent on formwork in accordance with manufacturer's recommendations.

3.05 INSERTS, EMBEDDED PARTS AND OPENINGS

A. Embedded Form Ties: Holes left by the removal of form tie cones shall be reamed with suitable toothed reamers so as to leave the surface of the holes clean and rough before being filled with mortar as specified for "Finish of Concrete Surfaces" in Section entitled "Cast in Place Concrete." Wire ties for holding forms will not be permitted. No form tying device or part thereof, other than metal, shall be left embedded in the concrete. Ties shall not be removed in such manner as to leave a hole extending through the interior of the concrete members. The use of snap ties which cause spalling of the concrete upon form stripping or tie removal will not be permitted. If steel panel forms are used, rubber grommets shall be provided where the ties pass through the form in order to prevent loss of cement paste. Where metal rods extending through the concrete are used to support or to strengthen forms, the rods shall remain embedded and shall terminate not less than 1 inch back from the formed face or faces of the concrete.

3.06 FORM CLEANING

A. Forms may be reused only if in good condition and only if acceptable to the CITY. Light sanding between uses will be required wherever necessary to obtain uniform surface texture on all exposed concrete surfaces. Exposed concrete surfaces are defined as surfaces which are permanently exposed to view. Unused tie rod holes in forms shall be covered with metal caps or shall be filled by other methods acceptable to the CITY.

3.07 FORMWORK TOLERANCES

A. Formwork shall be constructed to insure that finished concrete surfaces will be in accordance with the tolerances listed in ACI 347.

3.08 FORM REMOVAL

A. Careful procedures for the removal of forms shall be strictly followed, and this work shall be done with care so as to avoid injury to the concrete. No heavy loading on green concrete will be permitted. Forms for all parts of the Work not specifically mentioned herein shall remain in place for periods of time as determined by the CITY.

3.09 MAINTENANCE OF FORMS

A. Forms shall be maintained at all times in good condition, particularly as to size, shape, strength, rigidity, tightness, and smoothness of surface. Forms, when in place, shall conform to the established alignment and grades. Before concrete is placed, the forms shall be thoroughly cleaned. The form surfaces shall be treated with a non-staining mineral oil or other lubricant acceptable to the CITY. Any excess lubricant shall be satisfactorily removed before placing the concrete. Where field oiling of forms is required, the CONTRACTOR shall perform the oiling at least two weeks in advance of their use. Care shall be exercised to keep oil off the surfaces of steel reinforcement and other metal items to be embedded in concrete.

- END OF SECTION -

SECTION 03200 - CONCRETE REINFORCEMENT

PART 1 – GENERAL

1.01 SECTION INCLUDES

A. The CONTRACTOR shall furnish, fabricate and place all concrete reinforcing steel, welded wire fabric, couplers, and concrete inserts for use in reinforced concrete and shall perform all appurtenant work, including all the wires, clips, supports, chairs, spacers, and other accessories, all in accordance with the Contract Documents.

1.02 RELATED SECTIONS

A. Concrete Formwork

B. Cast-in-Place Concrete

C. Grout

1.03 REFERENCES

A. Without limiting the generality of other requirements of these specifications, all Work specified herein shall conform to or exceed the requirements of the Building Code and the applicable requirements of the following documents to the extent that the provisions of such documents are not in conflict with the requirements of this Section.

1. Codes and Standards

   a. The Building Code, as referenced herein, is the Florida Building Code.

2. Commercial Standards

   a. ACI 315R -80Details and Detailing of Concrete Reinforcement.

   b. CRSI Concrete Reinforcing Steel Institute Manual of Standard Practice

   c. ACI 305R -89Hot Weather Concreting

   d. ACI 318R -89Building Code Requirements for Reinforced Concrete.

   e. WRI Manual of Standard Practice for Welded Wire Fabric.

   f. AWS Dl.4Structural Welding Code Reinforcing Steel.

   g. ASTM A 185-88Specification for Welded Steel Wire Fabric for Concrete Reinforcement.

   h. ASTM A 615-89Specification for Deformed and Plain Billet Steel Bars for Concrete Reinforcement.

1.04 SUBMITTALS

A. The CONTRACTOR shall furnish shop bending diagrams, placing lists, and Drawings of all reinforcing steel prior to fabrication.

B. Details of the concrete reinforcing steel and concrete inserts shall be submitted by the CONTRACTOR at the earliest possible date after receipt by the CONTRACTOR of the Notice to Proceed. Said details of reinforcing steel for fabrication and erection shall conform to ACI 315 and the requirements specified and shown. The shop bending diagrams shall show the actual lengths of bars, to the nearest inch measured to the intersection of the extensions (tangents for bars of circular cross section) of the outside surface. The shop Drawings shall include bar placement diagrams which clearly indicate the dimensions of each bar splice.

C. Where mechanical couplers are shown on the Drawings to be used to splice reinforcing steel, the CONTRACTOR shall submit manufacturer's literature which contains instructions and recommendations for installation for each type of coupler used; certified test reports which verify the load capacity of each type and size of coupler used; and shop Drawings which show the location of each coupler with details of how they are to be installed in the formwork.

D. If reinforcing steel is spliced by welding at any location, the CONTRACTOR shall submit mill test reports which shall contain the information necessary for the determination of the carbon equivalent as specified in AWS Dl.4. The CONTRACTOR shall submit a written welding procedure for each type of weld for each size of bar which is to be spliced by welding, merely a statement that AWS procedures will be followed is not acceptable. Welding of rebar shall be done only where shown on the Drawings or allowed in writing by the CITY.

PART 2 – PRODUCTS

2.01 REINFORCEMENT

A. All reinforcing steel for all reinforced concrete construction shall conform to the following requirements:

1. Bar reinforcement shall conform to the requirements of ASTM A615 for Grade 60 Billet Steel Reinforcement with supplementary requirement S 1, and shall be manufactured in the United States.

2. Welded wire fabric reinforcement shall conform to the requirements of ASTM A 185 and the details shown on the Drawings; provided, that welded wire fabric with longitudinal wire of W9.5 size wire shall be either furnished in flat sheets or in rolls with a core diameter of not less than 10 inches; and provided further, that welded wire fabric with longitudinal wires larger than W9.5 size shall be furnished in flat sheets only. All welded wire fabric reinforcement shall be galvanized.

2.02 ACCESSORY MATERIALS

A. Bolsters, chairs, spacers and other devices for supporting and fastening reinforcing in place shall be galvanized wire type complying with CRSI recommendations on grade with gray plastic tipped legs.

B. Metal bar supports for reinforcing steel for wastewater structures shall be Class 2, Type B stainless steel protected bar supports (CRSI).

C. Tie Wire: Galvanized 16 gauge annealed type.

D. Concrete blocks (dobies), used to support and position reinforcing steel, shall have the same or higher compressive strength as specified for the concrete in which it is located. Concrete blocks shall only be used for slabs on grade.

2.03 FABRICATION

A. Reinforcing steel shall be accurately formed to the dimensions and shapes shown on the Drawings, and the fabricating details shall be prepared in accordance with ACI 315 and ACI 318, except as modified by the Drawings. Stirrups and tie bars shall be bent around a pin having a diameter not less than 1-1/2 inch for No. 3 bars, 2-inch for No. 4 bars, and 2-1/2 inch for No. 5 bars. Bends for other bars shall be made around a pin having a diameter not less than 6 times the minimum thickness, except for bars larger than 1 inch, in which case the bends shall be made around a pin of 8 bar diameters. Bars shall be bent cold.

B. The CONTRACTOR shall fabricate reinforcing bars for structures in accordance with bending diagrams, placing lists, and placing Drawings. Said Drawings, diagrams, and lists shall be prepared by the CONTRACTOR as specified under Section entitled "Submittals," herein.

C. Fabricating Tolerances: Bars used for concrete reinforcing shall meet the following requirements for fabricating tolerances:

1. Sheared length: + 1 inch

2. Depth of truss bars: + 0, - 1/2 inch

3. Stirrups and ties: + 1/2 inch

4. All other bends: + 1 inch

2.04 DOWEL ADHESIVE SYSTEM

A. Where shown on the Contract Drawings to be drilled and grouted, reinforcing bars anchored into hardened concrete with a dowel adhesive system shall use a two-component adhesive mix and shall be injected with a static mixing nozzle following manufacturer's instructions. The embedment depth of the bar as minimum shall match the dimension shown on the Drawings or increased as required to provide a minimum allowable bond strength that is equal to 125 percent of the yield strength of the bar. The adhesive system shall be "Sikadur Injection Gel" as manufactured by Sika Corporation, "Epcon System" as manufactured by ITQ Ramset / Redhead, "HIT C-100 System" as manufactured by Hilti, Inc., or approved equal/ CITY's approval is required for use of this system in locations other than those shown on the Contract Drawings.

2.05 MINIMUM REINFORCEMENT

A. At locations where reinforcing steel is not indicated on the drawings, minimum reinforcement shall be provided.

B. Minimum reinforcement shall be 0.2 percent of the cross sectional area along each face of the concrete member.

PART 3 – EXECUTION

3.01 PLACEMENT

A. Reinforcing steel shall be accurately positioned as shown on the Drawings, and shall be supported and wired together to prevent displacement, using annealed iron wire ties or suitable clips at intersections. All reinforcing steel shall be supported by concrete, plastic or metal supports, spacers or metal hangers which are strong and rigid enough to prevent any displacement of the reinforcing steel. Where concrete is to be placed on the ground, supporting concrete blocks (or dobies) shall be used, in sufficient numbers to support the bars without settlement, but in no case shall such support be continuous. All concrete blocks used to support reinforcing steel shall be tied to the steel with wire ties which are embedded in the blocks. For concrete over formwork, the CONTRACTOR shall furnish concrete, metal, plastic, or other acceptable bar chairs and spacers.

B. Tie wires shall be bent away from the forms in order to provide the specified concrete coverage.

C. Bars additional to those shown on the Drawings which may be found necessary or desirable by the CONTRACTOR for the purpose of securing reinforcement in position shall be provided by the CONTRACTOR at its own expense.

D. Unless otherwise specified, reinforcement placing tolerances shall be within the limits specified in Section 7.5 of ACI 318 except where in conflict with the requirements of the Building Code.

E. Bars may be moved as necessary to avoid interference with other reinforcing steel, conduits, or embedded items. If bars are moved more than one bar diameter or enough to exceed the above tolerances, the resulting arrangement of bars shall be as acceptable to the CITY. Reinforcing bars shall not be cut to place electrical plumbing or mechanical conduits, piping, ducts, etc. without the expressed written approval of the ENGINEER of Record.

F. Welded wire fabric reinforcement placed over horizontal forms shall be supported on slab bolsters having gray, plastic coated standard type legs as specified in Paragraph B herein. Slab bolsters shall be spaced not less than 30 inches on centers, shall extend continuously across the entire width of the reinforcing mat, and shall support the reinforcing mat in the plane shown on the Drawings.

G. Welded wire fabric placed over the ground shall be supported on wired concrete blocks (dobies) spaced not more than 3 feet on centers in any direction. The construction practice of placing welded wire fabric on the ground and hooking into place in the freshly placed concrete shall not be used.

H. The clear distance between parallel bars (except in columns and between multiple layers of bars in beams) shall be not less than the nominal diameter of the bars nor less than 1 1/3 times the maximum size of the coarse aggregate, nor less than one inch.

I. Where reinforcement in beams or girders is placed in 2 or more layers, the clear distance between layers shall be not less than one inch.

J. In columns, the clear distance between longitudinal bars shall be not less than 1 1/2 times the bar diameter, nor less than 1 1/2 times the maximum size of the coarse aggregate, nor less than 1 1/2 inches.

K. The clear distance between bars shall also apply to the distance between a contact splice and adjacent splices or bars.

L. Reinforcing bar splices shall only be used at locations shown on the Drawings. When it is necessary to splice reinforcement at points other than where shown, the character of the splice shall be as acceptable to the CITY.

M. The length of lap for reinforcing bars, unless otherwise shown on the Drawings shall be in accordance with ACI 318, Section 12.15.1 for a class B splice.

N. Laps of welded wire fabric shall be in accordance with the ACI 318. Adjoining sheets shall be securely tied together with No. 14 tie wire, one tie for each 2 running feet. Wires shall be staggered and tied in such a manner that they cannot slip.

O. Reinforcing shall not be straightened or rebent in a manner which will injure the material. Bars with kinks or bends not shown on the Drawings shall not be used. All bars shall be bent cold, unless otherwise permitted by the CITY. No bars partially embedded in concrete shall be field bent except as shown on the Drawings or specifically permitted by the CITY.

3.02 CLEANING AND PROTECTION

A. Reinforcing steel shall at all times be protected from conditions conducive to corrosion until concrete is placed around it.

B. The surfaces of all reinforcing steel and other metalwork to be in contact with concrete shall be thoroughly cleaned of all dirt, grease, loose scale and rust, grout, mortar and other foreign substances immediately before the concrete is placed. Where there is delay in depositing concrete, reinforcing shall be reinspected and, if necessary recleaned.

- END OF SECTION -

SECTION 03300 – CAST-IN-PLACE CONCRETE

PART 1 -- GENERAL

1.01 WORK INCLUDED

A. The CONTRACTOR shall furnish all materials for concrete in accordance with the provisions of this Section and shall form, mix, place, cure, repair, finish, and do all other work as required to produce finished concrete, all in accordance with the requirements of the Contract Documents.

1.02 RELATED WORK SPECIFIED ELSEWHERE

A. Concrete Formwork.

B. Grout.

C. Specialty Coatings

D. Metal Fabrications

1.03 REFERENCE SPECIFICATIONS, CODES, AND STANDARDS

A. Without limiting the generality of other requirements of these Specifications, all work specified herein shall conform to or exceed the requirements of the South Florida Building Code and the applicable requirements of the following documents to the extent that the provisions of such documents are not in conflict with the requirements of this Section.

1. Codes and Standards: The Building Code, as referenced herein, shall be the Florida Building Code.

2. Federal Specifications: UU-B-790A (Int.Amd.1) Building Paper, Vegetable Fiber (Kraft, Waterproofed, Water Repellant and Fire Resistant).

3. Commercial Standards

ACI 214.1R-81	Recommended Practice for Evaluation of Strength Test Results of Concrete.
ACI 318R-89	Building Code Requirements for Reinforced Concrete.
ACI 301-89(85)	Specifications for Structural Concrete for Buildings.
ACI 315R-80	Details and Detailing of Concrete Reinforcement.
ACI 347R-88	Recommended Practice for Concrete Formwork.
ASTM C 31-88	Methods of Making and Curing Concrete Test Specimens in the Field.
ASTM C 33-86	Specification for Concrete Aggregates.

ASTM C 39-86	Test Method for Compressive Strength of Cylindrical Concrete Specimens.
ASTM C 94-89b	Specification for Ready-Mixed Concrete.
ASTM C 114	Method for Chemical Analysis of Hydraulic Cement.
ASTM C 136	Method for Sieve Analysis of Fine and Coarse Aggregate.
ASTM C 143-89a	Test Method for Slump of Portland Cement Concrete.
ASTM C 150-89	Specification for Portland Cement.
ASTM C 156	Test Method for Water Retention by Concrete Curing Materials.
ASTM C 157-89	Test Method for Length Change of Hardened Cement Mortar and Concrete.
ASTM C 192-88	Method of Making and Curing Concrete Test Specimens in the Laboratory.
ASTM C 260-86	Specification for Air-Entraining Admixtures for Concrete.
ASTM C 494-86	Specification for Chemical Admixtures for Concrete.

1.04 SUBMITTALS

A. The design mix to be used shall be prepared by qualified persons and submitted for review. The design of the mix is the responsibility of the CONTRACTOR subject to the limitations of the specifications. Review processing of this submission will be required only as evidence that the mix has been designed by qualified persons and that the minimum requirements of the specifications have been met. Such review will in no way alter the responsibility of the CONTRACTOR to furnish concrete meeting the requirements of the specifications relative to strength and slump. If in the progress of the work the sources of materials change in characteristics or the CONTRACTOR requests a new source in writing, the CONTRACTOR shall, at its expense submit new test data and information for the establishment of a new design mix. Submit mix designs for Class A and Class B concrete.

B. Where ready-mix concrete is used, the CONTRACTOR shall provide delivery tickets at the time of delivery of each load of concrete. In addition to the information required by ASTM C94, each ticket shall show the mix number, cement content and water/cement ratio.

C. Location of all proposed construction joints.

D. Product technical data including curing compound and epoxy adhesives.

1.05 QUALITY ASSURANCE

A. Plant Qualification: Plant equipment and facilities shall meet all requirements of the Check List for Certification of Ready Mixed Concrete Production facilities of the National Ready Mixed Concrete Association and ASTM C 94.

B. Tests for compressive strength and slump of concrete will be performed as specified herein. Test for determining slump will be in accordance with the requirements of ASTM C 143.

C. The cost of all tests will be borne by the CITY. However, the CONTRACTOR shall be charged for the cost of any additional tests and investigation on work performed which does not meet the Specifications.

D. Concrete for testing shall be supplied by the CONTRACTOR at no cost to the CITY, and the CONTRACTOR shall provide assistance to the CITY in obtaining samples. The CONTRACTOR shall dispose of and clean up all excess material.

E. Construction Tolerances: The CONTRACTOR shall set and maintain concrete forms and perform finishing operations so as to ensure that the completed work is within the tolerances specified herein. Surface defects and irregularities are defined as finishes are to be distinguished from tolerances. Tolerance is the specified permissible variation from lines, grades, or dimensions shown. Where tolerances are not stated in the Specifications, permissible deviations will be in accordance with ACI 347 and Section 03100.

F. The following construction tolerances are hereby established and apply to finished walls and slab unless otherwise shown in the Drawings:

Item	**Tolerance**
1. Variation of the constructed linear outline from the established position in plan	In 10 feet: 1/4 inch; In 20 feet or more: 1/2 inch
2. Variation from the level or from the grades shown on the Drawings	In 10 feet: 1/4 inch; In 20 feet or more: 1/2 inch
3. Variation from the plum	In 10 feet: 1/4 inch; In 20 feet or more: 1/2 inch
4. Variation in the thickness of slabs and walls	Minus 1/4 inch; Plus 1/2 inch
5. Variation in the locations and sizes of slab and wall openings	Plus or minus 1/4 inch

G. The CONTRACTOR is fully responsible for all reinforced concrete work, and shall reject all delivered concrete and finishes not meeting these Specifications.

1.06 FIELD SAMPLES

A. Field Compression Tests

1. Compression test specimens shall be taken during construction from the first placement of each class of concrete specified herein and at intervals thereafter as selected by the CITY to insure continued compliance with these Specifications. At least one set of test specimens shall be made for each 50 yards of concrete placed. Each set of test specimens shall be a minimum of 5 cylinders.

2. Compression test specimens for concrete shall be made in accordance with ASTM C 31. Specimens shall be 6-inch diameter by 12-inch high cylinders.

3. Compression test shall be performed in accordance with ASTM C 39. Two test cylinders will be tested at 7 days and 2 at 28 days. The remaining cylinder will be held to verify test results, if needed.

B. Evaluation and Acceptance of Concrete

1. Evaluation and acceptance of the compressive strength of concrete shall be according to the requirements of ACI 318, Chapter 5 "Concrete Quality Mixing and Placing", and as specified herein.

2. If any concrete fails to meet these requirements, immediate corrective action shall be taken to increase the compressive strength for all subsequent batches of the type of concrete affected.

3. All concrete which fails to meet the ACI requirements and these specifications, is subject to removal and replacement at the cost of the CONTRACTOR.

PART 2 – PRODUCTS

2.01 CONCRETE MATERIALS

A. Materials shall be delivered, stored, and handled so as to prevent damage by water or breakage. Only one brand of cement shall be used. Cement reclaimed from cleaning bags or leaking containers shall not be used. All cement shall be used in the sequence of receipt of shipments.

B. All materials furnished and stored for the work shall comply with the requirements of ACI 301, as applicable.

C. Materials for concrete shall conform to the following requirements:

1. Cement shall be standard brand Portland cement conforming to ASTM C 150 for Type II. Portland cement shall contain not more than 0.60 percent alkalis. The term "alkalis" referred to herein is defined as the sum of the percentage of sodium oxide and 0.658 times the percentage of potassium oxide ($Na_2 0 + 0.658\ K_2 0$). These oxides shall be determined in accordance with ASTM C 114. A single brand of cement shall be used throughout the Work, and prior to its use, the brand shall be acceptable to the CITY. The cement shall be suitably protected from exposure to moisture until used. Cement that has become lumpy shall not be used. Sacked cement shall be stored in such a manner so as to permit access for inspection and sampling. Certified mill test reports for each shipment of cement to be used shall be submitted to the CITY if requested regarding compliance with these Specifications.

2. Water shall be potable, clean, and free from objectionable quantities of silty organic matter, alkali, salts and other impurities. The water shall be considered potable, for the purposes of this Section only, if it meets the requirements of the local governmental agencies.

3. Aggregates shall be obtained from pits acceptable to the ENGINEER, shall be non-reactive, and shall conform to the SFBC and ASTM C 33. Maximum size of coarse aggregate shall be as specified in Paragraph 2.05B. Lightweight sand for fine aggregate will not be permitted.

   a. Coarse aggregates shall consist of clean, hard, durable gravel, crushed gravel, crushed rock or a combination thereof. The coarse aggregates shall be prepared and handled in two or more size groups for combined aggregates with a maximum size not greater than 3/4-inch. When the aggregates are proportioned for each batch of concrete the two size groups shall be combined.

   b. Fine aggregates shall be natural sand or a combination of natural and manufactured sand that are hard and durable.

   c. Combined aggregates shall be well graded from coarse to fine sizes, and shall be uniformly graded between screen sizes to produce a concrete that has optimum workability and consolidation characteristics. Where a trial batch is required for a mix design, the final combined aggregate gradations will be established during the trial batch process.

   d. When tested in accordance with "Potential Reactivity of Aggregates (Chemical Method)" (ASTM C 289), the ratio of silica released to reduction in alkalinity shall not exceed 1.0.

   e. When tested in accordance with "Organic Impurities in Sands for Concrete" (ASTM C 40), the fine aggregate shall produce a color in the supernatant liquid no darker than the reference standard color solution.

   f. When tested in accordance with "Resistance to Abrasion of Small size Coarse Aggregate by Use of the Los Angeles Machine" (ASTM C 131), the coarse aggregate shall show a loss not exceeding 42 percent after 500 revolutions, or 10.5 percent after 100 revolutions.

   g. When tested in accordance with "Soundness of Aggregates by Use of Sodium Sulfate or Magnesium Sulfate" (ASTM C 88), the loss resulting after five cycles shall not exceed 10 percent for fine or coarse aggregate when using sodium sulfate.

2.02 ADMIXTURES

A. Air-entraining agent meeting the requirements of ASTM C260, shall be used. Sufficient air-entraining agent shall be used to provide a total air content of 3 to 5 percent.

B. Admixtures: Admixtures shall be required at the CITY's discretion or, if not required, may be added at the CONTRACTOR's option to control the set, effect water reduction, and increase workability. In either case, the addition of an admixture shall be at the CONTRACTOR's expense. The use of an admixture shall be subject to acceptance by the CITY. Concrete containing an admixture shall be first placed at a location determined by the CITY. If the use of an admixture is producing an inferior end result, the CONTRACTOR shall discontinue use of the admixture. Admixtures specified herein shall conform to the requirements of ASTM C 494. The required quantity of cement shall be used in the mix regardless of whether or not an admixture is used. Admixtures shall contain no free chloride ions, be non-toxic after 30 days, and shall be compatible with and made by the same manufacturer as the air entraining admixture.

1. Set controlling admixture shall be either with or without water-reducing properties. Where the air temperature at the time of placement is expected to be consistently over 80 degrees F, a set retarding admixture such as Sika Chemical Corporation's Plastiment, Master Builder's Pozzolith 200R or equal shall be used. Where the air temperature at the time of placement is expected to be consistently under 40 degrees Fahrenheit, a set accelerating admixture such as Sika Chemical Corporation's Plastocrete 161FL, Master Builder's Pozzolith 50C, or equal shall be used.

2. Low range water reducer shall be added to all structural concrete, and shall conform to ASTM C 494, Type A. It shall be either a hydroxylated carboxylic acid type or a hydroxylated polymer type. The quantity of admixture used and the method of mixing shall be in accordance with the manufacturer's instructions and recommendations.

3. Water reducing and retarding admixture shall be in conformance with ASTM C 494 Type D free of chlorides, "MB-HC" by Master Builders, "WRDA-79" by Grace or equal.

4. High range water reducer shall be sulfonated polymer conforming to ASTM C 494, Type F or G.

5. If the high range water reducing agent is added to the concrete at the batch plant, it shall be second generation type, Daracem 100, as manufactured by W.R. Grace & Co., Pozzolith 430R, as manufactured by Master Builders; or equal. High range water reducer shall be added to the concrete after all other ingredients have been mixed and initial slump has been verified.

6. If the high range water reducer is added to the concrete at the job site, it shall be used in conjunction with a low range water reducer and shall be Pozzolith 400N and Pozzolith MBL82, as manufactured by Master Builders; WRDA 19 and WRDA 79, as manufactured by W.R. Grace & Co., or equal. Concrete shall have a slump of 3 inches ± 1/2-inch prior to adding the high range water reducing admixture at the job site. The high range water reducing admixture shall be accurately measured and pressure injected into the mixer as a single dose by an experienced technician. A standby system shall be provided and tested prior to each day's operation of the job site system.

7. Concrete shall be mixed at mixing speed for a minimum of 30 mixer revolutions after the addition of the high range water reducer.

D. Fly Ash: Conform to ASTM C-618-89. Fly ash shall be limited to 20% of total cementacious materials.

2.03 ACCESSORIES

A. Epoxy adhesives shall be the following products for the applications specified to be used in strict accordance with manufacturer's recommendations.

1. For bonding freshly-mixed, plastic concrete to hardened concrete, Sikadur 32 Hi-Mod, LPL Epoxy Adhesive, as manufactured by Sika Chemical Corporation; Concresive 1001--PL, as manufactured by Adhesive Engineering Company; or equal.

2. For bonding hardened concrete or masonry to steel, Colma-Dur Gel, Sikadur Hi-Mod Gel, or equal.

3. Epoxy grouting of vertical and horizontal dowels in existing concrete: A two-component structural epoxy gel such as Rawl/Sika Foil-Fast Epoxy Injection Gel or Sikadur injection gel as manufactured by Sika Chemical Corp. or approved equal. Place with pneumatic or manual injection gun.

2.04 CONCRETE MIX

A. General: Concrete shall be composed of cement, admixtures, aggregates and water. These materials shall be of the qualities specified. The exact proportions in which these materials are to be used for different parts of the work will be determined during the trial batch. In general, the mix shall be designed to produce a concrete capable of being deposited so as to obtain maximum density and minimum shrinkage and, where deposited in forms, to have good consolidation properties and maximum smoothness of surface. Mix designs with more than 41 percent of sand of the total weight of fine and coarse aggregate shall not be used. The aggregate gradations shall be formulated to provide fresh concrete that will not promote rock pockets around reinforcing steel or embedded items. The proportions shall be changed whenever necessary or desirable to meet the required results at no additional cost to the CITY. All changes shall be subject to review by the ENGINEER.

B. Water-Cement Ratio and Compressive Strength: The minimum compressive strength and cement content of concrete shall be not less than that specified in the following tabulation:

Type of Work	Min. 28-Day Compressive Strength psi	Maximum Size Aggregate (in.)	Minimum Cement per cu. yd. (sacks)	Maximum W/(C+F) Ratio (by weight)
Structural Concrete:	4000	3/4	6.0	0.43

Type of Work	Min. 28-Day Compressive Strength psi	Maximum Size Aggregate (in.)	Minimum Cement per cu. yd. (sacks)	Maximum W/(C+F) Ratio (by weight)
All reinforced concrete unless noted otherwise.	(Class A)			
Pumpable Concrete: Pipe, equipment, valve and misc. concrete support in PS 6	4000 (Class B)	Pea-Rock	5.5	0.50
Misc. Concrete : Sidewalks, thrust blocks, duct banks	3000 (Class C)	3/4	5.5	0.50

Note: One sack of cement equals 94 lbs.
C = Cement
F = Fly Ash
W = Water

C. Adjustments to Mix Design: The mix proportions used shall be changed subject to the limitation specified herein, whenever such change is necessary or desirable to secure the required strength, density, workability, and surface finish and the CONTRACTOR shall be entitled to no additional compensation because of such changes.

2.05 CONSISTENCY

A. The quantity of water entering into a batch of concrete shall be just sufficient, with a normal mixing period, to produce a concrete which can be worked properly into place without segregation, and which can be compacted by the vibratory methods herein specified to give the desired density, impermeability and smoothness of surface. The quantity of water shall be changed as necessary, with variations in the nature or moisture content of the aggregates, to maintain uniform production of a desired consistency. The consistency of the concrete in successive batches shall be determined by slump tests in accordance with ASTM C 143. Slumps shall be 4"±1" measured at the form. Slump with high range water reducers shall be 6"±1" at the form.

2.06 READY-MIXED CONCRETE

A. Ready-mixed concrete shall be used meeting the requirements as to materials, batching, mixing, transporting, and placing as specified herein and in accordance with ASTM C 94.

B. Ready-mixed concrete shall be delivered to the site of the work, and discharge shall be completed within one and one-half hour after the addition of the cement to the aggregates or before the drum has been revolved 250 revolutions, whichever is first. Upon delivery from the truck concrete temperature shall not exceed 90EF.

C. Truck mixers shall be equipped with electrically-actuated counters by which the number of revolutions of the drum or blades may be readily verified. The counter shall be of the resettable, recording type. The counters shall be actuated at the time of starting mixers at mixing speeds.

D. Each batch of concrete shall be mixed in a truck mixer for not less than 70 revolutions of the drum or blades at the rate of rotation designated by the manufacturer of equipment. Additional mixing, if any, shall be at the speed designated by the manufacturer of the equipment as agitating speed. All materials including mixing water shall be in the mixer drum before actuating the revolution counter for determining the number of revolution of mixing.

PART 3 -- EXECUTION

3.01 PROPORTIONING AND MIXING

A. Proportioning: Proportioning of the concrete mix shall conform to the requirements of Chapter 3 "Proportioning" of ACI 301; provided, that the maximum slump for any concrete shall not exceed the limits specified in this Section of the Specifications.

B. Mixing: Mixing of concrete shall conform to the requirements of Chapter 7 of said ACI 301 Specifications.

C. Slump: Slump shall be 4"±1" (6"±1" with high range water reducers) measured at the form.

D. Re-tempering of concrete or mortar which has partially hardened will not be permitted.

3.02 PREPARATION

A. General: Earth surfaces shall be thoroughly wetted by sprinkling, prior to the placing of any concrete, and these surfaces shall be kept moist by frequent sprinkling up to the time of placing concrete thereon. The surface shall be free from standing water, mud, and debris at the time of placing concrete.

B. No concrete shall be placed until the reinforcement steel and formwork have been erected in a manner acceptable to the ENGINEER. The CONTRACTOR shall notify the ENGINEER not less than 2 working days prior to Concrete Placement, allowing 1 day for review and any corrective measures which are required.

C. Joints in Concrete: Concrete surfaces upon or against which concrete is to be placed, where the placement of the old concrete has been stopped or interrupted so that, as determined by the ENGINEER, the new concrete cannot be incorporated integrally with that

previously placed, are defined as construction joints. The surfaces of horizontal joints shall be given a compacted, roughened surface for good bond. Except where the Drawings call for joint surfaces to be coated, the joint surfaces shall be cleaned of all laitance, loose or defective concrete, and foreign material.

D. After the surfaces have been prepared all approximately horizontal construction joints shall be covered with a layer of mortar approximately one-inch thick. The mortar shall have the same proportions of cement and sand as the regular concrete mixture. The water-cement ratio of the mortar in place shall not exceed that of the concrete to be placed upon it, and the consistency of the mortar shall be suitable for placing and working in the manner hereinafter specified. The mortar shall be spread uniformly and shall be worked thoroughly into all irregularities of the surface. Wire brooms shall be used where possible to scrub the mortar into the surface. Concrete shall be placed immediately upon the fresh mortar.

E. Placing Interruptions: When placing of concrete is to be interrupted long enough for the concrete to take a set, the working face shall be given a shape by the use of forms or other means, that will secure proper union with subsequent work; provided that construction joints shall be made only where acceptable to the ENGINEER.

F. Embedded Items: No concrete shall be placed until all formwork, installation of parts to be embedded, reinforcing steel, and preparation of surfaces involved in the placing have been completed and accepted by the ENGINEER at least 4 hours before placement of concrete. All surfaces of forms and embedded items that have become encrusted with dried grout from concrete previously placed shall be cleaned of all such grout before the surrounding or adjacent concrete is placed.

G. All inserts or other embedded items shall conform to the requirements herein.

H. All reinforcement, anchor bolts, sleeves, inserts, and similar items shall be set and secured in the forms where shown on the Drawings or by shop drawings and shall be acceptable to the ENGINEER before any concrete is placed. Accuracy of placement is the responsibility of the CONTRACTOR.

I. All anchor bolts called for on the drawings shall be cast-in-place in the concrete. Drilled, impact, adhesive or other types of anchors shall not be substituted for anchor bolts. Anchor bolts shall conform to the requirements set forth in the Section entitled "Miscellaneous Metalwork."

J. Casting New Concrete Against Old: Where concrete is to be cast against old concrete (any concrete which is greater than 60 days of age), the surface of the old concrete shall be thoroughly cleaned and roughened by sand-blasting (exposing aggregate) prior to the application of an epoxy bonding agent.

K. No concrete shall be placed in any structure until all water entering the space to be filled with concrete has been properly cut off or has been diverted by pipes, or other means, and carried out of the forms, clear of the work. No concrete shall be deposited underwater, except where shown on the Drawings to be placed by the tremie method, nor shall the

CONTRACTOR allow still water to rise on any concrete until the concrete has attained its initial set. Water shall not be permitted to flow over the surface of any concrete in such manner and at such velocity as will injure the surface finish of the concrete. Pumping or other necessary dewatering operations for removing ground water, if required, will be subject to the review of the ENGINEER.

L. Corrosion Protection: Pipe, conduit, dowels, and other ferrous items required to be embedded in concrete construction shall be so positioned and supported prior to placement of concrete that there will be a minimum of 2 inches clearance between said items and any part of the concrete reinforcement. Securing such items in position by wiring or welding them to the reinforcement will not be permitted.

M. Openings for pipes, inserts for pipe hangers and brackets, and the setting of anchors shall, where practicable, be provided for during the placing of concrete.

N. Anchor bolts shall be accurately set, and shall be maintained in position by templates while being embedded in concrete.

O. Cleaning: The surfaces of all metalwork to be in contact with concrete shall be thoroughly cleaned of all dirt, grease, loose scale and rust, grout, mortar, and other foreign substances immediately before the concrete is placed.

3.03 PLACING CONCRETE

A. General: Placing of concrete shall conform to the applicable requirements of Chapter 8 of ACI 301 and the requirements of this Section.

B. Non-Conforming Work or Materials: Concrete which upon or before placing is found not to conform to the requirements specified herein shall be rejected and immediately removed from the Work. Concrete which is not placed in accordance with these Specifications, or which is of inferior quality, shall be removed and replaced by and at the expense of the CONTRACTOR.

C. Unauthorized Placement: No concrete shall be placed except in the presence of duly authorized representative of the ENGINEER. The CONTRACTOR shall notify the ENGINEER at least 24 hours in advance of placement of any concrete.

D. Placement in Wall Forms: Concrete shall not be dropped through reinforcement steel or into any deep form, whether reinforcement is present or not, causing separation of the coarse aggregate from the mortar on account of repeatedly hitting rods or the sides of the form as it falls, nor shall concrete be placed in any form in such a manner as to leave accumulation of mortar on the form surfaces above the placed concrete. In such cases, some means such as the use of hoppers and, if necessary, vertical ducts of canvas, rubber, or metal shall be used for placing concrete in the forms in a manner that it may reach the place of final deposit without separation. In no case shall the free fall of concrete exceed 4 feet below the ends of ducts, chutes, or buggies. Concrete shall be uniformly distributed during the process of depositing and in no case after depositing shall any portion be displaced in the forms more

than 6 feet in horizontal direction. Concrete in forms shall be deposited in uniform horizontal layers not deeper than 2 feet; and care shall be taken to avoid inclined layers or inclined construction joints except where such are required for sloping members. Each layer shall be placed while the previous layer is still soft. The rate of placing concrete in forms shall not exceed 5 feet of vertical rise per hour.

E. Casting New Concrete Against Old: An epoxy adhesive bonding agent shall be applied to set surfaces of construction joints according to the manufacturer's written recommendations. This provision shall not apply to joints where waterstop is installed; see Section entitled, "Waterstop Joints in Concrete."

F. Conveyor Belts and Chutes: All ends of chutes, hopper gates, and all other points of concrete discharge throughout the CONTRACTOR's conveying, hoisting and placing system shall be so designed and arranged that concrete passing from them will not fall separated into whatever receptacle immediately receives it. Conveyor belts, if used, shall be of a type acceptable to the ENGINEER. Chutes longer than 50 feet will not be permitted. Minimum slopes of chutes shall be such that concrete of the specified consistency will readily flow in them. If a conveyor belt is used, it shall be wiped clean by a device operated in such a manner that none of the mortar adhering to the belt will be wasted. All conveyor belts and chutes shall be covered. Sufficient illumination shall be provided in the interior of all forms so that the concrete at the places of deposit is visible from the deck or runway.

G. Placement in Slabs: Concrete placed in sloping slabs shall proceed uniformly from the bottom of the slab to the top, for the full width of the pour. As the work progresses, the concrete shall be vibrated and carefully worked around the slab reinforcement, and the surface of the slab shall be screeded in an up-slope direction.

H. Temperature of Concrete: The temperature of concrete when it is being placed shall be not more than 90 degrees F. Concrete ingredients shall not be heated to a temperature higher than that necessary to keep the temperature of the mixed concrete, as placed, from falling below the specified minimum temperature. If concrete is placed when the weather is such that the temperature of the concrete would exceed 90 degrees F, the CONTRACTOR shall employ effective means, such as pre-cooling of aggregates and mixing water using ice or placing at night, as necessary to maintain the temperature of the concrete, as it is placed, below 90 degrees F. The CONTRACTOR shall be entitled to no additional compensation on account of the foregoing requirements. During summer months concrete pours shall be scheduled in the morning or early part of the day when temperatures are cooler.

I. Pumping Equipment: Pumping equipment and procedures if used shall conform to the recommendations contained in the report of ACI Committee 304 on Placing Concrete by Pumping Methods, ACI 304.2R. The specified slump shall be measured at the point of discharge. The loss of slump in pumping shall not exceed 1-1/2-inches.

J. The order of placing concrete in all parts of the work shall be acceptable to the ENGINEER. In order to minimize the effects of shrinkage, the concrete shall be placed in units as bounded by construction joints shown on the Drawings. The placing of units shall be done by placing alternate units in a manner such that each unit placed shall have cured at least 7

days before the contiguous unit or units are placed, except that the corner sections of vertical walls shall not be placed until the 2 adjacent wall panels have cured at least 14 days.

K. The surface of the concrete shall be level whenever a run of concrete is stopped. To insure a level, straight joint on the exposed surface of walls, a wood strip at least 3/4 of an inch thick shall be tacked to the forms on these surfaces. The concrete shall be carried about 1/2 of an inch above the underside of the strip. About one hour after the concrete is placed, the strip shall be removed and any irregularities in the edge formed by the strip shall be leveled with a trowel and all laitance shall be removed.

L. As concrete is placed in the forms or in excavations, it shall be thoroughly settled and compacted, throughout the entire depth of the layer which is being consolidated, into a dense, homogeneous mass, filling all corners and angles, thoroughly embedding the reinforcement, eliminating rock pockets, and bringing only a slight excess of water to the exposed surface of concrete during placement. Vibrators shall be high speed power vibrators (8000 to 10,000 rpm) of an immersion type in sufficient number and with (at least one) standby units as required.

M. Care shall be used in placing concrete around waterstops. The concrete shall be carefully worked by rodding and vibrating to make sure that all air and rock pockets have been eliminated. Where flat-strip type waterstops are placed horizontally, the concrete shall be worked under the waterstops by hand, making sure that all air and rock pockets have been eliminated. Concrete surrounding the waterstops shall be given additional vibration, over and above that used for adjacent concrete placement to assure complete embedment of the waterstops in the concrete.

N. Concrete in walls shall be internally vibrated and at the same time, stirred, or worked with suitable appliances, tamping bars, shovels, or forked tools until it completely fills the forms or excavations and closes snugly against all surfaces. Subsequent layers of concrete shall not be placed until the layers previously placed have been worked thoroughly as specified. Vibrators shall be provided in sufficient numbers, with standby units as required, to accomplish the results herein specified within 15 minutes after concrete of the prescribed consistency is placed in the forms. The vibrating head shall be kept from contact with the surfaces of the forms. Care shall be taken not to vibrate concrete excessively or to work it in any manner that causes segregation of its constituents.

3.04 CONCRETE FINISHING

A. General: All surfaces shall be free from fins, bulges, ridges, offsets, honeycombing, or roughness of any kind, and shall present a finished, smooth, continuous hard surface. Allowable deviations from plumb or level and from the alignment, profiles, and dimensions shown on the Drawings are defined as tolerances and are specified in Paragraphs 1.05F herein. These tolerances are to be distinguished from irregularities in finish as described herein. Aluminum finishing tools shall not be used.

B. Formed Surfaces: Formed surfaces shall be finished per Paragraph 3.09 A.

C. Unformed Surfaces: After proper and adequate vibration and tamping, all unformed top surfaces of slabs, floors, walls, and curbs shall be brought to a uniform surface with suitable tools. The classes of finish specified for unformed concrete surfaces are designated and defined as follows:

1. Finish U1 - Sufficient leveling and screeding to produce an even, uniform surface with surface irregularities not to exceed 3/8-inch. No further special finish is required.

2. Finish U2 - After sufficient stiffening of the screeded concrete, surfaces shall be float finished with wood or metal floats or with a finishing machine using float blades. Excessive floating of surfaces while the concrete is plastic and dusting of dry cement and sand on the concrete surface to absorb excess moisture will not be permitted. Floating shall be the minimum necessary to produce a surface that is free from screed marks and is uniform in texture. Surface irregularities shall not exceed 1/4-inch.

   Joints and edges shall be tooled where shown on the Drawings or as determined by the ENGINEER.

3. Finish U3 - After the floated surface (as specified for Finish U2) has hardened sufficiently to prevent excess of fine material from being drawn to the surface, steel troweling shall be performed with firm pressure such as will flatten the sandy texture of the floated surface and produce a dense, uniform surface free from blemishes, ripples, and trowel marks. The finish shall be smooth and free of all irregularities.

4. Finish U4 - Steel trowel finish (as specified for Finish U3) without local depressions or high points. In addition, the surface shall be given a light hairbroom finish with brooming perpendicular to drainage unless otherwise shown. The resulting surface shall be rough enough to provide a nonskid finish.

D. Unformed surfaces shall be finished according to the following schedule:

Area	**Finish**
Grade slabs and foundations to be covered with concrete or fill material	U1
Slabs which are water bearing with slopes ten percent or less	U3
Slabs not water bearing, exterior slabs, walkways interior slabs subject to wetness	U4

3.05 CURING AND PROTECTION

A. General: All concrete shall be cured for not less than 7 days after placing, in accordance with the methods specified herein for the different parts of the work, and described in detail in the following paragraphs:

Surface to be cured	Method
Unstripped forms	1
Construction joints	2
All concrete surfaces not specifically provided for elsewhere in this Paragraph	3

B. Materials for curing concrete as specified herein shall conform to the following requirements:

1. Concrete curing compound shall be MB 429 as manufactured by Master Builders, Cleveland, OH; Hunt Process Clear ARB as manufactured by Hunt Process Co., Santa Fe Springs, CA; Select Cure CRB as manufactured by Select Products Co., Upland, CA; or equal. The curing compound shall contain a fugitive dye so that areas of application will be readily distinguishable.

2. Burlap mats: conform to AASMTO Specification M182.

C. Method 1: Wooden forms shall be wetted immediately after concrete has been placed and shall be kept wet with water until removed. If steel forms are used the exposed concrete surfaces shall be kept continuously wet until the forms are removed. If forms are removed within 7 days of placing the concrete, curing shall be continued in accordance with Method 3.

D. Method 2: The surface shall be covered with burlap mats which shall be kept wet with water for the duration of the curing period, until the concrete in the walls has been placed. No curing compound shall be applied to surfaces cured under Method 2.

E. Method 3: The surface shall be sprayed with a liquid curing compound.

1. It shall be applied in accordance with the manufacturer's printed instructions at a maximum coverage rate of 200 square feet per gallon and in such a manner as to cover the surface with a uniform film which will seal thoroughly.

2. Where the curing compound method is used, care shall be exercised to avoid damage to the seal during the curing period. Should the seal be damaged or broken before the expiration of the curing period, the break shall be repaired immediately by the application of additional curing compound over the damaged portion.

3. Wherever curing compound may have been applied by mistake to faces against which concrete subsequently is to be placed and to which it is to adhere, said compound shall be entirely removed by wet sandblasting just prior to the placing of new concrete.

4. Where curing compound is specified, it shall be applied as soon as the concrete has hardened enough to prevent marring on unformed surfaces, and within 2 hours after removal of forms from contact with formed surfaces. Repairs required to be made to formed surfaces shall be made within the said 2-hour period provided, however, that any such repairs which cannot be made within the said 2-hour period shall be delayed

until after the curing compound has been applied. When repairs are to be made to an area on which curing compound has been applied, the area involved shall first be wet-sandblasted to remove the curing compound, following which repairs shall be made as provided herein.

F. The CONTRACTOR shall protect all concrete against injury until final acceptance by the CITY. Fresh concrete shall be protected from damage due to rain. The CONTRACTOR shall provide such protection while the concrete is still plastic and whenever such precipitation is imminent or occurring.

3.06 DEFECTIVE CONCRETE

A. As soon as forms are removed, all exposed surfaces shall be carefully examined and any irregularities shall be immediately rubbed or ground in a satisfactory manner in order to secure a smooth, uniform, and continuous surface. Plastering or coating of surfaces to be smoothed will not be permitted. No repairs shall be made until reviewed by the ENGINEER. In no case will extensive patching of honeycombed concrete be permitted. Concrete containing minor voids, holes, honeycombing, or similar depression defects shall have them repaired as specified herein. Concrete containing extensive voids, holes, honeycombing, or similar depression defects, shall be completely removed and replaced. All repairs and replacements herein specified shall be promptly executed by the CONTRACTOR at its own expense.

B. Defective surfaces to be repaired as specified in Paragraph 3.07A, shall be cut back from trueline a minimum depth of 1/2-inch over the entire area. Feathered edges will not be permitted. Where chipping or cutting tools are not required in order to deepen the area properly, the surface shall be prepared for bonding by the removal of all laitance or soft material, and not less than 1/32-inch depth of the surface film from all hard portions. The material used for repair proposed shall consist of a mixture of one sack of cement to 3 cubic feet of sand. For exposed walls, the cement shall contain such a proportion of Atlas white Portland cement as is required to make the color of the patch match the color of the surrounding concrete.

C. Holes left by tie-rod cones shall be repaired in an acceptable manner with dry-packed cement grout or premixed patching material as accepted by the ENGINEER.

D. All repairs shall be built up and shaped in such a manner that the completed work will conform to the requirements of Article 3.05 or 3.06, as applicable, using acceptable methods which will not disturb the bond, cause sagging, or cause horizontal fractures. Surfaces of said repairs shall receive the same kind and amount of curing treatment as required for the concrete in the repaired section.

E. Prior to filling any structure with water, all cracks that may have developed shall be "vee'd" and filled with sealant conforming to the requirements of Section entitled, "Waterstop Joints in Concrete." This repair method shall be done on the water bearing face of members. Prior to backfilling, faces of members in contact with fill shall also have cracks repaired as specified herein.

3.07 CARE AND REPAIR OF CONCRETE

A. The CONTRACTOR shall protect all concrete against injury or damage from excessive heat, lack of moisture, overstress, or any other cause until final acceptance by the CITY. Particular care shall be taken to prevent the drying of concrete and to avoid roughening or otherwise damaging the surface. Any concrete found to be damaged, or which may have been originally defective, or which becomes defective at any time prior to the final acceptance of the completed work, or which departs from the established line or grade, or which, for any other reason, does not conform to the requirements of the Contract Documents, shall be satisfactorily repaired or removed and replaced with acceptable concrete at the CONTRACTOR's expense.

- END OF SECTION -

SECTION 03315 - GROUT

PART 1 – GENERAL

1.01 THE REQUIREMENT

A. This Section consists of grouting as shown on the Drawings or as specified herein and as required for a complete installation.

1.02 REFERENCES

A. Specifications, codes, and standards shall be as specified in Section 03400 "Precast Concrete," and as referred to herein.

B. Additional Commercial Standards: CRD C 621 - Corps of Engineerss Specification for Nonshrink Grout.

PART 2 – PRODUCTS

2.01 PREPACKAGED NON-SHRINK CEMENTITIOUS GROUT

A. Whenever a non-shrink cement grout is identified on the drawings, it shall mean pre-packaged non-shrink cementitious grout unless otherwise indicated on the Drawings.

B. Nonshrink grout shall be a prepackaged, inorganic, non gas liberating, nonmetallic, cement based grout requiring only the addition of water. Manufacturer's instructions shall be printed on each bag or other container in which the materials are packaged. The specific formulation for each class of nonshrink grout specified herein shall be that recommended by the manufacturer for the particular application.

C. Nonshrink grouts shall have a minimum 28 day compressive strength of 5000 psi (ASTM C109, restrained), shall have no shrinkage (0.0 percent) and a maximum 4.0 percent expansion in the plastic state when tested in accordance with ASTM C 827, and shall have no shrinkage (0.0 percent) and a maximum of 0.2 percent expansion in the hardened state when tested in accordance with CRD C 621.

D. Cement based grout shall be Five Star Grout as manufactured by Five Star Products, Inc., Fairfield, Connecticut, or equal.

E. Cementitious non-shrink grout shall be used at locations where there are no dynamic loads; the grout will not come in contact with wastewater or wastewater gases, and where non-shrink grout is identified on the Drawings. Applications include, but are not limited to, structural steel grouting systems, gate frames and guides, and precast concrete to cast-in-place concrete joints.

2.02 PREPACKAGED NON-SHRINK EPOXY GROUT

A. Epoxy-based non-shrink grout shall be a three component, 100 percent solids, solvent-free system designed for machinery grouting. Applications include, but are not limited to, anchoring, pump and motor bases, and any other equipment imparting dynamic loads to the support system.

B. When non-shrink grout is identified on the Drawings in submerged (water or wastewater) or under wastewater gas environment, epoxy-based non-shrink grouts shall be used.

C. The epoxy grout shall be delivered to site as prepackaged, three-component systems composing of the resin, hardener, and specially blended aggregates. The components shall be stored as recommended by the manufacturer until use.

D. Non-shrink epoxy grout shall be Five Star DP Epoxy Grout by Five Star Products, Inc., Fairfield, Connecticut, or equal.

2.03 CEMENT GROUT

A. Miscellaneous cement grout used in concrete masonry openings, floor openings, etc. shall conform to the requirements specified herein for Class B concrete, except the coarse aggregate shall have 100 percent passing the 1/2 inch sieve and 85 percent passing the 3/8 inch sieves.

2.04 DOWEL / ANCHOR BOLT ADHESIVE SYSTEM

A. When rebar or anchor bolts are specified to be drilled in and grouted on the Drawings, an adhesive system specified in Section 03200 shall be used.

2.05 CURING MATERIALS

A. Curing materials for prepackaged grout shall be as recommended by the manufacturer. Cement grouts shall be cured with water for a minimum of seven days.

2.06 CONSISTENCY

A. The consistency of grouts shall be that necessary to completely fill the space to be grouted for the particular application. Dry pack consistency is such that the grout is plastic and moldable but will not flow. Where "dry pack" is called for in the Contract Documents, it shall mean a grout of the above described consistency; the type of grout to be used shall be as specified herein for the particular application.

2.07 MEASUREMENT OF INGREDIENTS

A. Prepackaged grouts shall have ingredients measured by means recommended by the manufacturer.

PART 3 – EXECUTION

3.01 GENERAL

A. All mixing, surface preparation, handling, placing, consolidation, and other means of execution for prepackaged grouts shall be done according to the instructions and recommendations of the manufacturer.

B. Cementitious grouts may be dry packed, poured in, vibrated or pumped into place as recommended by the manufacturer. Epoxy grouts shall only be poured in.

C. Forms shall be used to place epoxy grout. Surfaces to be in contact with epoxy grout shall be prepared in accordance with the manufacturer's instructions. Steel plates in contact with grout shall receive a commercial blast to SSPC-SP6.

D. Aggregate content of the epoxy grout shall not be altered without the concurrence of the manufacturer and the CITY.

3.02 CONSOLIDATION

A. Grout shall be placed in such a manner, for the consistency necessary for each application, so as to assure that the space to be grouted is completely filled.

- END OF SECTION -

SECTION 03400 - PRECAST CONCRETE

PART 1 – GENERAL

1.01 REQUIREMENTS

A. The CONTRACTOR shall construct all precast concrete items as shown on the Drawings, including all appurtenances necessary to make a complete installation.

1.02 RELATED WORK SPECIFIED ELSEWHERE

A. Grout

1.03 REFERENCE SPECIFICATIONS, CODES AND STANDARDS

A. Without limiting the generality of other requirements of these specifications, all work specified herein shall conform to the applicable requirements of the following documents. All referenced specifications, codes, and standards refer to the most current issue available at the end of the Bid.

1. Florida Building Code.

2. ACI 318-Building Code Requirements for Reinforced Concrete.

3. PCI Standard MNL-116 - Manual for Quality Control for Plants and Production of Precast and Prestressed Concrete Products.

4. PCI Design Handbook.

1.04 QUALITY ASSURANCE

A. All manufactured precast concrete units shall be produced by an experienced manufacturer regularly engaged in the production of such items. All manufactured precast concrete and site-cast units shall be free of defects, checks, and cracks. Care shall be taken in the mixing of materials, casting, curing and shipping to avoid any of the above. The CITY may elect to examine the units at the casting yard or upon arrival of the same at the site. The CITY shall have the option of rejecting any or all of the precast work if it does not meet with the requirements specified herein or on the Drawings. All rejected work shall be replaced at no additional cost to the CITY.

B. Manufacturer qualifications: The precast concrete manufacturing plant shall be certified by the Prestressed Concrete Institute, Plant Certification Program, prior to the start of production. In lieu of such certification, the manufacturer shall, at his expense, meet the following requirements:

1. Retain independent testing or consulting firm approved by the CITY.

2. The basis of inspection shall be the Prestressed Concrete Institute Manual for Quality Control for Plants and Production of Precast and Prestressed Concrete Products, MNL-116.

3. This firm shall inspect the precast plant at two-week intervals during production and issue a report, certified by a registered Engineer verifying that materials, methods, products and quality control meet all the requirements of the specifications, drawings, and MNL-116. If the report indicates to the contrary, the CITY, at CONTRACTOR expense, will inspect and may reject any or all products produced during the period of non-compliance with the above requirements.

C. Plant production must be under direct supervision and control of an Engineer who possesses a minimum of five years experience in precast concrete work.

PART 2 – PRODUCTS

2.01 CONCRETE

A. Concrete materials shall have a 28-day strength of 4,000 psi.

B. For prestressed concrete items, minimum compressive strength of concrete at 28 days shall be 5,000 psi unless otherwise specified. Minimum compressive strength of concrete at transfer of pre-stressing force shall be 4,000 psi.

C. For non-prestressed concrete items, minimum compressive strength of concrete at 28 days shall be 4000 psi unless otherwise specified.

2.02 GROUT

A. Grout for joints between panels shall be a non-shrink, non-metallic grout in conformance with Section 03315, Grout.

B. Minimum compressive strength of grout at 7 days shall be 3,000 psi.

2.03 REINFORCING STEEL

A. Reinforcing steel used for precast concrete construction shall conform to ASTM A615, Grade 60.

2.04 PRESTRESSING STRANDS

A. Pre-stressing strands shall be 7-wire, stress-relieved, high-strength strands Grade 250K or 270K.

2.05 STEEL INSERTS

A. Steel inserts shall be in accordance with the Drawings.

2.06 WELDING

A. Welding shall conform to applicable standards.

2.07 NEOPRENE

A. Neoprene bearing pads shall conform to applicable standards.

PART 3 – EXECUTION

3.01 FABRICATION AND CASTING

A. All precast members shall be fabricated and cast to the shapes, dimensions and lengths shown on the Drawings and in compliance with PCI MNL-116. Precast members shall be straight, true and free from dimensional distortions, except for camber and tolerances permitted later in this clause. All integral appurtenances, reinforcing, openings, etc., shall be accurately located and secured in position with the form work system. Form materials shall be steel and the systems free form leakage during the casting operation.

B. All cover of reinforcing shall be the same as noted on the Drawings.

C. Because of the critical nature of the bond development length in prestressed concrete panel construction, if the transfer of stress is by burning of the fully tensioned strands at the ends of the member, each strand shall first be burned at the ends of the bed and then at each end of each member before proceeding to the next strand in the burning pattern.

D. The CONTRACTOR shall coordinate the communication of all necessary information concerning openings, sleeves, or inserts to the manufacturer of the precast members.

E. Concrete shall be finished in accordance with the CITY's requirements. All recesses due to cut tendons shall be grouted.

F. Curing of precast members shall be in accordance with applicable standards. Use of a membrane curing compound will not be allowed.

G. The manufacturer shall provide lifting inserts.

3.02 HANDLING, TRANSPORTING AND STORING

A. Precast members shall not be transported away from the casting yard until the concrete has reached the minimum required 28 day compressive strength and a period of at least 5 days has elapsed since casting, unless otherwise permitted by the CITY.

B. No precast member shall be transported from the plant to the job site prior to approval of that member by the plant inspector. This approval will be stamped on the member by the plant inspector.

C. During handling, transporting, and storing, precast concrete members shall be lifted and supported only at the lifting or supporting points as indicated on the shop drawings.

D. All precast members shall be stored on solid, unyielding, storage blocks in a manner to prevent torsion, objectionable bending, and contact with the ground.

E. Precast concrete members shall not be used as storage areas for other materials or equipment.

F. Precast members damaged while being handled or transported will be rejected or shall be repaired in a manner approved by the CITY.

3.03 ERECTION

A. Erection shall be carried out by the manufacturer or under his supervision using labor, equipment, tools and materials required for proper execution of the work.

B. CONTRACTOR shall prepare all bearing surfaces to a true and level line prior to erection. All supports of the precast members shall be accurately located and of required size and bearing materials.

C. Installation of the precast members shall be made by leveling the top surface of the assembled units keeping the units tight and at right angles to the bearing surface.

D. Grouting between adjacent precast members and along the edges of the assembled precast members shall be accomplished as indicated on the drawings, care being taken to solidly pack such spaces and to prevent leakage or droppings of grout through the assembled precast members. Any grout which seeps through the precast members shall be removed before it hardens.

E. In no case shall concentrated construction loads, or construction loads exceeding the design loads, be placed on the precast members. In no case shall loads be placed on the precast members prior to the welding operations associated with erection, and prior to placing of topping (if required).

F. No CONTRACTOR, Subcontractor or any of his employees shall arbitrarily cut, drill, punch or otherwise tamper with the precast members.

- - END OF SECTION - -

SECTION 05531 – ALUMINUM ACCESS HATCHES

PART 1 – GENERAL

1.01 SCOPE

A. The CONTRACTOR shall design, furnish and install all aluminum covers and access hatches in the sizes and quantities as shown on the Drawings.

1.02 MANUFACTURERS

A. The following list of companies manufacture products that are acceptable for this Section, subject to conformance with the specified requirements: Bilco, USF Fabrication, U.S. Foundry, Halliday Products, or equal.

1.03 SUBMITTALS

A. The CONTRACTOR shall submit shop drawings and other information to the CITY for review. CONTRACTOR shall field verify the dimensions and installation requirements and procedures prior to submittals.

1.04 GUARANTEE

A. The manufacturer shall guarantee against defects in material or workmanship of the hatches for a period of five years.

PART 2 – PRODUCTS

2.01 ACCESS HATCHES

A. General

1. Door opening sizes, number and direction of swing of door leaves, and locations shall be as shown on the Drawings. The Drawings show the frame opening requirements. Door leaves shall be 1/4 inch, minimum, diamond pattern plate with an approved raised pattern, non-skid surface. Plate shall be stiffened as required to maintain allowable stress and deflection requirements. Stiffeners shall consist of angles or bars welded to the bottom of plate.

2. All doors shall be aluminum (clear anodized finish) unless otherwise noted. All doors in locations subject to direct vehicular traffic shall be galvanized steel designed for H-20 live loads.

3. Openings larger than 42 inches in either direction shall have double leaf doors.

4. Doors shall be designed for flush mounting and for easy opening from both inside and outside.

5. All doors shall be provided with an automatic hold-open arm with release handle.

6. Double leaf doors shall be provided with Type 316 stainless steel safety chains to go across the open sides of the door, when in the open position. Brackets shall be provided on the underside of the doors to hold the safety bars when not in use.

7. All hardware, including but not limited to, all parts of the latch and lifting mechanism assemblies, hold open arms and guides, brackets, hinges, springs, pins, and fasteners shall be Type 316 stainless steel.

8. All doors shall be watertight with a continuous gasket. All single door applications shall include a continuous EPDM odor reduction gasket.

9. Cylinder locks with keyway protected by a cover plug shall be provided with all hatches.

10. Door leafs shall be 1/4-inch thick aluminum diamond plate, minimum, stiffened, reinforced, and designed for AASHTO H-20 wheel loads as shown in the drawings.

11. Door frames shall be trough-type or angle-type as indicated on the Drawings and equipped with a built-in neoprene cushion. On trough-type frames, the drainpipe shall be provided by the Contractor and shall extend to the nearest point of discharge acceptable to the Engineer.

12. Exterior doors shall be Type "J-AL" or "JD-AL", by Bilco Company, Type ”W1S” or “W2S” by Halliday Products Inc., Type "TPS" or "TPD", by U.S.F. Fabrication Inc., Type "THG" or "THG-D", by Thompson Fabricating LLC., or equal

13. Interior doors shall be Type "K" or "KD", by Bilco Company, Type ”S1S” or “S2S” by Halliday Products Inc., Type "APS300" or "APD300", by U.S.F. Fabrication Inc., Type "TH" or "TH-D", by Thompson Fabricating LLC., or equal

14. Doors rated for H-20 traffic loading shall be “JAL-HD” or “JDAL-HD” by the Bilco Company, Type “H1W” or “H2W” by Halliday Products, Inc

15. Hatches shall be guaranteed against defects for a period of five years.

2.02 FIXED LADDERS

A. Where the Contract Documents indicate fixed ladders are required under access hatches, they shall be provided with “LadderUp, Model LU-4” by Bilco Company, “L1E Ladder Extension” by Halliday Products Inc., or “Ladder Climb-out Device” by Thompson Fabricating.

B. The safety posts shall be manufactured of the same material as the access door with telescoping tubular sections that lock automatically when fully extended.

C. Upward and downward movement shall be controlled by a stainless steel balancing mechanism.

D. Safety posts shall be assembled in strict accordance with manufacturer's recommendations.

2.03 FALL THROUGH PREVENTION SYSTEM

A. All access hatches and access doors covering openings measuring 12 inches or more in its least dimension through which persons may fall shall be equipped with a fall through prevention system, except where noted on the Contract Drawings. Access hatches and access doors shall be provided with a permanent installed fall through prevention grate system that provides continuous safety assurance in both its closed and open positions. The grate system shall be made with 6061-T6 aluminum or FRP and be designed for a 300 psf minimum live load, unless noted otherwise

PART 3 – EXECUTION

3.01 FABRICATION

A. All measurements and dimensions shall be based on field conditions and shall be verified by the Contractor prior to fabrication. Such verification shall include coordination with adjoining work. Fabrication shall begin only after such field measurements.

B. All fabricated work shall be shop fitted together as much as practicable and delivered to the field, complete and ready for erection, unless sections have to be removable. All miscellaneous items such as stiffeners, fillets, connections, brackets, and other details necessary for a complete installation shall be provided.

C. All work shall be fabricated and installed in a manner that will provide for expansion and contraction, prevent shearing of bolts, screws, and other fastenings, ensure rigidity, and provide a close fit of sections.

D. Finished members shall conform to the lines, angles, and curves shown on the Drawings and be free from distortions of any kind.

E. All shearings shall be neat and accurate, with parts exposed to view neatly finished. Flame cutting is allowed only when performed utilizing a machine.

F. All shop connections shall be welded unless otherwise indicated on the Drawings or specified herein. Bolts and welds shall conform to Section 05050 entitled “Metal Fastening”. All fastenings shall be concealed where practicable.

3.02 INSTALLATION

A. Assembly and installation of fabricate system components shall be performed in strict accordance with manufacturer’s recommendations.

B. All gratings, access hatches, and access doors shall be erected square, plumb and true, accurately fitted, adequately anchored in place and set at proper elevations and positions.

- - END OF SECTION - -

SECTION 07920 - SEALANTS AND CAULKING

PART 1 – GENERAL

1.01 THE REQUIREMENT

A. The Contractor shall provide sealant and caulking work required for a complete installation as is indicated on the Drawings and specified herein. The required applications of sealants and caulking include, but are not necessarily limited to, the following general locations:

1. Masonry joints, exterior and interior.

2. Joints at penetrations of walls, decks by piping, doors, windows, louvers and other services and equipment.

3. Joints between items of equipment and other construction.

4. Concrete joints

1.02 SUBMITTALS

A. Submit shop drawings and color samples of sealant for review in accordance with the Section entitled "Submittals".

B. Submit a two year guarantee on sealant type caulking work against joint failure. Joint failure is defined as leaks of air or water; evidence of loss of cohesion; fading of sealant material; migration of sealant; evidence of loss of adhesion between sealant and joint edge.

1.03 ACCEPTABLE MANUFACTURERS

A. The following list of manufacturer products are acceptable for this Section, subject to conformance with the specified requirements: Tremco, Thiokol, Dymoric or equal.

PART 2 – PRODUCTS

2.01 MATERIALS

A. Primer: Where required by sealant manufacturer, the primer shall be a compound designed to insure the adhesion of sealant. Material shall be provided by the sealant manufacturer and shall be selected for compatibility with substrate.

B. Sealant

1. Type 1: Multi-component, non-sag, low-modulus polyurethane rubber sealant meeting ASTM C-920, Type M, Grade NS, Class 25, use NT, M, A, and O. Capable of withstanding 50% in extension or compression such as Sikaflex-2C NS/SL, Sika Corporation, or approved equal.

2. Type 2: Single component polyurethane sealant meeting ASTM C-920, Type S, Grade NS, Class 25, Use NT, M, A, and O. Capable of withstanding 25% in extension or compression such as Sikaflex 1A by Sika Corporation or approved equal.

3. Type 3: Single component, low-modulus moisture curing silicone meeting ASTM C 920, Type S, Grade NS, Class 25, Use NT, M, G, and A. Capable of withstanding 50% extension and compression. Pecora 890 by Pecora Corporation, or approved equal.

4. Type 4: Single component, mildew resistant, moisture-curing silicone meeting ASTM C-920, Type S, Grade NS, Class 25, Use NT, M, G, and A. Pecora 898 by Pecora Corporation, or approved equal.

5. Type 5: Single component, acrylic latex meeting ASTM C-834. AC-20+ Silicone by Pecora Corporation, or approved equal.

6. Type 6: High grade butyl sealant meeting Federal Specification TT-S-00-1657. BC-158 by Pecora Corporation or approved equal.

7. Type 7: Multi-component chemical resistant polysulfide sealant conforming to ASTM C-920, Type M, Grade NS, Class 25 such as Sonolastic Two Part by BASF Construction Chemicals, or approved equal.

8. Type 8: Non-sag, Multi Component, traffic grade polyurethane sealant meeting ASTM C920, Type 19, Grate NS, Class 25, use T, M, A, and O. DynaTread by Pecora Corporation or approved equal.

C. Joint Backing shall be closed cell foam. Material shall be nonreactive with caulking materials and non-oily. Minimum density shall be 3.24 pcf. Use no asphalt or bitumen-impregnated fiber with sealants.

D. Joint cleaner shall be as recommended by sealant or caulking compound manufacturer.

E. Joint Primer shall be as recommended by sealant manufacturer.

F. Bond Breaker tape shall be either polyethylene or plastic as recommended by the sealant manufacturer.

G. Color: Where manufacturer’s standard colors do not closely match materials being sealed, provide a custom color.

PART 3 – EXECUTION

3.01 GENERAL

A. Comply with sealant manufacturer's printed instructions except where more stringent requirements are shown or specified and except where manufacturer's technical representative directs otherwise.

3.02 SHIPPING, HANDLING AND STORAGE

A. Store and handle materials so as to prevent the inclusion of foreign matter or the damage of materials by water or breakage. Procure and store in original containers until ready for use. Material showing evidence of damage will be rejected.

B. Store and handle materials so as to prevent the inclusion of foreign matter or the damage of materials by water or breakage. Procure and store in original containers until ready for use. Material showing evidence of damage shall be rejected.

3.03 INSTALLATION

A. Employ only proven installation techniques, which will insure that sealants will be deposited in uniform, continuous ribbons without gaps or air pockets, with complete "wetting" of the joint bond surface equally on opposite sides. Except as otherwise indicated, the Contractor shall fill the sealant rabbet to a concave surface, slightly below adjoining surfaces. Where horizontal joints are between a horizontal surface and a vertical surface, fill joint to form a slight cove, so that joint will not trap moisture and dirt.

B. Install sealants to depths as specified, or if not, as recommended by the sealant manufacturer and as follows:

1. Moving Joints: For normal moving joints sealed with elastomeric sealants but not subject to traffic, fill joints to a depth equal to 50% of joint width, but not more than 1/2-inch deep or less than 1/4-inch deep.

2. Sealed Joints: For joints sealed with non-elastomeric sealants and caulking compounds, fill joints to a depth in the range of 75% to 125% of joint width.

3. Thresholds: Set thresholds in full bed of caulking compound; remove excess materials.

3.04 SCHEDULE

A. Schedule of Sealants

Application	Sealant	Color
Vertical and horizontal joints bordered on both sides by concrete, masonry, precast concrete or other porous building material.	Type 2	To closely match adjacent surfaces or mortar and as selected by the CITY.
Vertical and horizontal joints bordered on both sides by painted metals, anodized aluminum, mill finished aluminum, PVC, glass or other non-porous building material.	Type 3	To closely match adjacent surfaces and as selected by the CITY.
Masonry expansion and control joints less than 1¼" wide.	Type 2	To closely match adjacent surfaces and as selected by the CITY.

Application	Sealant	Color
Masonry expansion and control joints equal or greater than 1¼ inches wide and not to exceed 2”.	Type 1	To closely match adjacent surfaces and as selected by the CITY.
Perimeter sealing of doors, windows, louvers, piping, ducts, and electrical conduit. See Note 1.	Type 2 OR Type 3	To closely match adjacent surfaces and as selected by the CITY.
Below thresholds.	Type 6	Manufacturer's standard
Submerged in liquids. See Notes 2 and 3.	Type 1	Manufacturer's standard
Submerged in liquids with high concentration of chlorine (> 2 ppm).	Type 7	Manufacturer’s standard
Horizontal Joints exposed to vehicular or pedestrian traffic.	Type 8	To closely match adjacent surfaces.
Other joints indicated on the drawings or customarily sealed but not listed.	Type recommended by manufacturer	To closely match adjacent surfaces and as selected by the CITY.

Notes:
1. Provide UL approved sealants for penetrations thru fire-rated walls and as specified in Section 07270.
2. Sealants which will come in contact with potable water shall meet the requirements of NSF 61.
3. Where sealant will be immersed in liquid chemicals verify compatibility prior to installation of sealant.

3.05 PROTECTION OF ADJOINING SURFACES

A. Prime or seal the joint surfaces wherever shown or recommended by the sealant manufacturer. Do not allow primer/sealer to spill or migrate onto adjoining surfaces.

3.06 SEALANT BACKER ROD

A. Install sealant backer rod for liquid elastomeric sealants, except where shown to be omitted or recommended to be omitted by sealant manufacturer for the application shown.

3.07 BOND BREAKER

A. Install bond breaker tape wherever shown and wherever required by manufacturer's recommendations to insure that elastomeric sealants will perform properly.

3.08 SPILLAGE

A. Sealants or compounds shall not overflow or spill onto adjoining surfaces, or to migrate into the voids of adjoining surfaces. Masking tape or other precautionary devices shall be used to prevent staining of adjoining surfaces.

3.09 CURING

A. Sealants and caulking compounds shall be cured in compliance with manufacturer's instructions and recommendations, to obtain high early bond strength, internal cohesive strength, and surface durability.

3.10 CLEANING

A. Excess and spillage of compounds shall be promptly removed as the work progresses. Adjoining surfaces shall be cleaned by whatever means may be necessary to eliminate evidence of spillage. Do not damage the adjoining surfaces or finishes.

- - END OF SECTION - -

SECTION 09850 – PAINTING

PART 1 – GENERAL

1.01 SCOPE

A. The CONTRACTOR shall furnish all labor, tools, materials, supervision and equipment necessary to do all the work specified herein and as required for a complete installation, including surface preparation priming and painting of CONTRACTOR furnished equipment, materials and structures.

1.02 GENERAL INFORMATION AND DESCRIPTION

A. All paint for concrete and metal surfaces shall be especially adapted for use around untreated municipal wastewater and shall be applied in conformance with the manufacturer's published specifications.

B. All paint for final coats shall be fume resistant, compounded with pigments suitable for exposure to sewage gases, especially to hydrogen sulfide and carbon dioxide. Pigments shall be materials which do not tend to darken, discolor, or fade due to the action of sewage gases. If a paint manufacturer proposes use of paint which is not designated "fume resistant" in its literature, it shall furnish full information concerning the pigments used in this paint.

C. Coatings used in conjunction with potable water supply systems shall have U.S. Environmental Protection Agency (EPA) and FDA approval for use with potable water and shall not impart a taste or odor to the water.

D. The term "paint", as used herein, includes emulsions, enamels, paints, stains, varnishes, sealers, cement filler, cement latex filler and other coatings, whether used as prime, intermediate, or finish coats.

E. All buildings, facilities, structures, and appurtenances, as indicated on the Drawings and as specified herein, shall be painted with not less then one shop coat and field coat(s), or one prime coat and finish coat(s) of the appropriate paint. Items to be painted include, but are not limited to exterior and interior concrete, gypsum drywall, structural steel, miscellaneous metals, operators, pipe fittings, valves, mechanical equipment, motors, conduit, and all other work which is obviously required to be painted unless otherwise specified.

F. Baked on enamel finishes and items with standard shop finishes such as graphic panels, electrical equipment, instrumentation, etc., shall not be field painted unless the finish is damaged during shipment or installation. Aluminum, stainless steel, fiberglass and bronze work shall not be painted unless color coding and marking is required or otherwise specified. A list of surfaces not to be coated is included in Article 1.09.

G. The CONTRACTOR shall obtain all permits, licenses and inspections and shall comply with all laws, codes, ordinances, rules and regulations promulgated by authorities having jurisdiction which may bear on the work. This compliance will include Federal Public Law 91 596 more commonly known as the "Occupational Safety and Health Act of 1970".

1.03 REFERENCE SPECIFICATION, CODES AND STANDARDS

A. Without limiting the generality of these specifications the Work shall conform to the applicable requirements of the following documents:

1. SSPC-The Society for Protective Coatings Standards

2. SSPC-Vis 1Pictorial Surface Preparation Standards for Painting Steel Structures

3. SSPC-SP2Hand Tool Cleaning

4. SSPC-SP3Power Tool Cleaning

5. SSPC-SP5White Metal Blast Cleaning

6. SSPC-SP6Commercial Blast Cleaning

7. SSPC-SP10Near-White Metal Blast

8. SSPC-SP13/ Surface Preparation of Concrete

9. NACE-National Association of Corrosion Engineers

10. ASTM D1737-Test Method for Elongation of Attached Organic Coatings with Cylindrical Mandrel Apparatus

11. ASTM B117-Method of Salt Spray (Fog) Testing

12. ASTM D4060-Test Method for Abrasion Resistance of Organic Coating by the Taber Abraser

13. ASTM D3359-Method for Measuring Adhesion by Tape Test

1.04 MANUFACTURERS

A. All painting materials shall be as manufactured by Tnemec, Carboline, Sherwin Williams, or equal.

1.05 SUBMITTALS AND SERVICES

A. The CONTRACTOR shall submit paint manufacturer's data sheets and samples of each finish and color to the ENGINEER for review, before any work is started in accordance with Section 01300 - Submittals.

B. Submitted samples of each finish and color shall be prepared so that areas of each sample indicate the appearance of the various coats. For example, where a three coat system is specified, the sample shall be divided into three areas indicating one coat only, two coats and all three coats. The ENGINEER will provide written authorization constituting a standard, as to color and finish only, for each coating system.

C. The CONTRACTOR shall prepare a complete schedule of surfaces to be coated and shall identify the surface preparation and paint system he proposes to use. The paint schedule shall be in conformance with Article 3.07. The schedule shall contain the name of the paint

manufacturer, and the name, address and telephone number of the manufacturer's representative that will inspect the work. The schedule shall be submitted to the ENGINEER for review as soon as possible following the Notice to Proceed so that the schedule may be used to identify colors and to specify shop painting systems on order for fabricated equipment.

D. Name and detailed qualifications of the protective coating applicator or subcontractor. Qualifications shall include, but not be limited to, five (5) references which show that the painting applicator or subcontractor has previous successful experience with the specified or comparable coating systems, a list of installations that are currently in service and documentation that applicator or subcontractor is currently a qualified applicator of the proposed coatings by the manufacturer. Include the name, address and telephone number of the owner of each installation for which the coating applicator provided the coating

1.06 SERVICES OF MANUFACTURERS REPRESENTATIVE

A. The CONTRACTOR shall purchase paint from an acceptable manufacturer. The manufacturer shall assign a representative to inspect the application of his product both in the shop and field. The manufacturer's representative shall submit his report to the ENGINEER at the completion of his work identifying the products used and verifying that said products were properly applied and that the paint systems were proper for the exposure and service.

B. Services shall also include, but not be limited to:

1. Inspecting prior coatings of paint, determination of best means of surface preparation, and issuance of a certification letter as described herein after;

2. Periodic inspection during application of coatings;

3. Inspection of completed work after proper curing and issuance of a certification letter defining final acceptance by the manufacturer for warrantee purposes.

1.07 MANUFACTURERS' INSTRUCTIONS

A. The manufacturers' published instructions for use as a guide in specifying and applying the manufacturers' proposed paint should be submitted to the ENGINEER. Paint shall not be delivered to the job before acceptance of the manufacturers' instructions is given by the ENGINEER.

B. A manufacturer's paint will not be considered for use unless that manufacturer's published instructions meet the following requirements:

1. The instructions must have been written and published by the manufacturer for the purpose and with the intent of giving complete instruction for the use and application of the proposed paint in the locality and for the conditions for which the paint is specified or shown to be applied under this Contract.

2. All limitations, precautions, and requirements that may adversely affect the paint; that may cause unsatisfactory results after the painting application; or that may cause the paint not to serve the purpose for which it was intended; that is, to protect the covered material from corrosion, shall be clearly and completely stated in the instructions. These

limitations and requirements shall, if they exist, include, but not be limited to the following:

a. Methods of application

b. Number of coats

c. Thickness of each coat

d. Total thickness

e. Drying time of each coat, including primer

f. Primer required to be used

g. Primers not permitted

h. Use of a primer

C. Thinner and use of thinner

a. Temperature and relative humidity limitations during application and after application

b. Time allowed between coats

c. Protection from sun

d. Physical properties of paint including solids content and ingredient analysis

e. Surface preparation

f. Touch up requirements and limitations

D. Concrete surfaces specified by the paint manufacturer to be acid etched shall be etched in accordance with the manufacturer's instructions. The surface shall then be thoroughly scrubbed with clean water, rinsed, and allowed to dry. The surface shall be tested with a moisture meter to determine when dry before coating. The surface shall also be tested for pH to determine the acid has been properly neutralized.

1.08 QUALITY ASSURANCE

A. The CONTRACTOR shall give the ENGINEER a minimum of three days advance notice of the start of any field surface preparation work of coating application work.

B. All such work shall be performed only in the presence of the ENGINEER, unless the ENGINEER has specifically allowed the performance of such work in his absence.

C. Inspection by the ENGINEER, or the waiver of inspection of any particular portion of the work, shall not relieve the CONTRACTOR of his responsibility to perform the work in accordance with these Specifications.

D. The Contractor shall provide five references which show previous successful experience with the specified or comparable coating systems. If the coating is to be performed by a

subcontractor, said subcontractor shall provide five references which show previous successful experience with the specified or comparable coating systems. Include the name, address, and the telephone number for the City of each installation for which the Contractor or subcontractor provided the protective coating.

1.09 SAFETY AND HEALTH REQUIREMENTS

A. In accordance with requirements of OSHA Safety and Health Standards for Construction (29CFR1926) and the applicable requirements of regulatory agencies having jurisdiction, as well as manufacturer's printed instructions, appropriate technical bulletins, manuals, and material safety data sheets, the CONTRACTOR shall provide and require use of personnel protective and safety equipment for persons working in or about the project site.

B. Respirators shall be worn by persons engaged or assisting in spray painting. The CONTRACTOR shall provide ventilating equipment and all necessary safety equipment for the protection of the workmen and the work.

C. All paint shall comply with all requirements of the Air Pollution Regulatory Acts concerning the application and formulation of paints and coatings for an area in which the paints are applied. Specifically, paints shall be reformulated as required to meet the local, State and Federal requirements.

1.10 SURFACES NOT TO BE COATED

A. The following list of items shall not be coated unless otherwise noted.

1. Encased piping or conduit.

2. Stainless steel work.

3. Galvanized checkered plate.

4. Aluminum handrails, grating and checkered plate.

5. Flexible couplings, lubricated bearing surfaces, insulation and plastic pipe and conduit.

6. Packing glands and other adjustable parts of mechanical equipment.

7. Finish hardware.

8. Steel encased in concrete or masonry.

9. Plastic switch plates and receptacle plates.

10. Signs, nameplates, serial numbers, and operating instruction labels.

11. Any code requiring labels, such as Underwriters' Laboratories and Factory Mutual, or any equipment identification, performance rating, name or nomenclature plates.

12. Any moving parts of operating units, mechanical and electrical parts, such as valve and damper operators, linkages, sinkages, sensing devices, motor and fan shafts, unless otherwise indicated.

1.11 QUALITY WORKMANSHIP

A. The CONTRACTOR shall be responsible for the cleanliness of his painting operations and shall use covers and masking tape to protect the work whenever such covering is necessary, or if so requested by the CITY. Any unwanted paint shall be carefully removed without damage to any finished paint or surface. If damage does occur, the entire surface, adjacent to and including the damaged area, shall be repainted without visible lapmarks and without additional cost to the CITY.

B. Painting found defective shall be scraped or sandblasted off and repainted as the CITY may direct. Before final acceptance of the work, damaged surfaces of paint shall be cleaned and repainted as directed by the CITY.

C. Any pipe scheduled to be painted and having received a coating of a tar or asphalt compound shall be painted with two coats or "Inertol Tar Stop", "Tnemec Tar Bar" or equal before successive coats are applied in accordance with the paint schedule.

1.12 ADDITIONAL PAINT

A. At the end of the project, the CONTRACTOR shall turn over to the CITY a gallon can of each type and color of paint, primer, thinner or other coating used in the field painting. If the manufacturer packages the material concerned in gallon cans, then it shall be delivered in unopened labeled cans as it comes from the factory. If the manufacturer does not package the material in gallon cans, and in the case of special colors, the materials shall be delivered in new gallon containers, properly closed with typed labels indicating brand, type, color, etc. The manufacturer's literature describing the materials and giving directions for their use shall be furnished in three bound copies. A type written inventory list shall be furnished at the time of delivery.

1.13 SHIPPING, HANDLING AND STORAGE

A. All painting materials shall be brought to the job site in the original sealed labeled containers of the paint manufacturer and shall be subject to review by the Engineer. Where thinning is necessary, only the product of the manufacturer furnishing the paint shall be used. All such thinning shall be done strictly in accordance with the manufacturer's instructions, and with the full knowledge of the Engineer.

B. Materials and their storage shall be in full compliance with the requirements of pertinent codes and fire regulations. Receptacles shall be placed outside buildings for paint gates and containers. Paint waste shall not be disposed of in plumbing fixtures, process drains or other plant systems or process units.

PART 2 – PRODUCTS

2.01 MATERIALS

A. Table 09850 1 depicts the coatings referenced in Article 3.07, "Paint Schedule". The Table lists Tnemec products as a reference. Equivalent products by the manufacturers listed in Article 1.04 of this Section may be submitted for review and acceptance by the ENGINEER.

TABLE 09850-1

PRODUCT LISTING

Reference Number	Description	Manufacturers Reference TNEMEC, XYPEX
100	Drywall Primer	51-92 PVA Sealer
101	Vinyl Acrylic Primer	51-792 PVA Sealer
102	Epoxy, Polyamide Masonry Filler	54WB Concrete & Masonry Filler
105	Hi-Build Epoxoline II	N69 – Color Hi-Build Epoxoline II
109	Acrylic	6 – Color Tneme-Cryl
110	Endura Shield	73 - Color Endurashield
111	Sand Textured Acrylic	181 W.B. Tneme-Crete
117	Epoxy, Coal Tar (Hi-Build)	46H-413 Hi-Build Tneme-Tar
118	Epoxy Sealer (Clear)	201 Epoxoprime
119	Surface Tolerant Epoxy	135 CHEMBUILD
120	Vinyl Ester	120-5002 Vinester Primer
121	Water Proofing	Xypex Concentrate
122	Water Proofing	Xypex Modified
123	H.B. Tnemec-Tufcoat	113 H.B. Theme – Top Coat
124	High Solids Epoxy	104 H.S. Epoxy
126	Filler Surfacer	Series 63-1500 Filler & Surfacer

B. No lead containing protective coating materials may be used on this project.

PART 3 – EXECUTION

3.01 SURFACE PREPARATION

A. Surfaces to be painted shall be clean and dry, and free of dust, rust, scale and all foreign matter. No solvent cleaning, power or hand tool cleaning shall be permitted unless acceptable to the Engineer or specified herein.

B. Except as otherwise provided, all preparation of metal surfaces shall be in accordance with Specifications SP-1 through SP-10 of the Steel Structures Painting Council (SSPC). Where Steel Structures Painting Specifications are referred to in these Contract Documents, the

corresponding Pictorial Surfaces Preparation Standard shall be used to define the minimum final surface conditions to be supplied. Grease and oil shall be removed and the surface prepared by hand tool cleaning, power tool cleaning or blast cleaning in accordance with the appropriate Specification SP-1 through SP-10.

C. Weld flux, weld spatter and excessive rust scale shall be removed by power tool cleaning as per SSPC-SP-3-63.

D. Threaded portions of valve and gate stems, machined surfaces which are limited for sliding contact, surfaces which are to be assembled against gaskets, surfaces or shafting on which sprockets are to fit, or which are intended to fit into bearings, machined surfaces of bronze trim on slide gates and similar surfaces shall be masked off to protect them from the sandblasting of adjacent surfaces. Cadmium-plated or galvanized items shall not be sandblasted unless hereinafter specified, except that cadmium-plated, zinc-plated, or sherardized fasteners used in assembly of equipment to the sandblasted shall be sandblasted in the same manner as the unprotected metal. All installed equipment, mechanical drives, and adjacent painted equipment shall be protected from sandblasting. Protection shall prevent any sand or dust from entering the mechanical drive units or equipment where damage could be caused.

E. Hardware accessories, machined surfaces, plates, lighting fixtures, and similar items in place prior to cleaning and painting, and not intended to be painted, shall be protected or removed during painting operations and repositioned upon completion of painting operations.

F. Any abraded areas of shop or field applied coating shall be touched up with the same type of shop or field applied coating, even to the extent of applying an entire coating, if necessary. Touch up coating and surface preparations shall be in addition to and not considered as the first field coat.

G. Sand from sandblasting shall be thoroughly removed, using a vacuum cleaner if necessary. No surface which has been sandblasted shall be painted until inspected by the Engineer.

H. Exposed Pipe

1. Bituminous coated pipe shall not be used in exposed locations. Pipe which shall be exposed after project completion shall be primed in accordance with the requirements herein. Any bituminous coated ferrous pipe which is inadvertently installed in exposed locations shall be sandblasted to SSPC SP 5 White Metal before priming and painting.

2. After installation and prior to finish painting, all exterior, exposed flanged joints shall have the gap between adjoining flanges and gaps between the pipe wall and threaded-on flanges sealed with a single component Thiokol caulking to prevent rust stains.

I. Ferrous Metal Surfaces

1. All ferrous metal surfaces not required to be galvanized shall be cleaned of all oil grease, dirt, rust and tight and loose mill scale by blasting in accordance with the following: SSPC SP 5 White Metal Blast Cleaning and comply with the visual standard NACE 1, for shop prepared and shop primed metal to be submerged or in a corrosive environment, SSPC-SP10 Near White Metal Blast Cleaning, and comply with the visual standard NACE 2 for field prepared metal to be submerged or in a corrosive environment, SSPC-SP6 and comply with the visual standard NACE 3 for metal in all

other locations. Pickling, complying with SSPC SP 8, may be substituted for Near White Blast in areas as determined by the Engineer. Priming shall follow sandblasting before any evidence of corrosion occurs, before nightfall and before any moisture is on the surface.

J. Field surface preparation of small, isolated areas such as field welds, repair of scratches, abrasions or other marks to the shop prime or finish shall be cleaned by power tools in accordance with SSPC SP 3, or in difficult and otherwise inaccessible areas by hand cleaning in accordance with SSPC SP 2 and spot primed.

K. Primed or Coated Surfaces and Non Ferrous Surfaces

1. All coated surfaces shall be cleaned prior to application of successive coats. All non ferrous metals not to be coated shall be cleaned. This cleaning shall be done in accordance with SSPC SP 1, Solvent Cleaning.

L. Shop Finished Surfaces

1. All shop coated surfaces shall be protected from damage and corrosion before and after installation by treating damaged areas immediately upon detection. Abraded or corroded spots on shop coated surfaces shall be prepared in accordance with SSPC SP 2, Hand Tool Cleaning and then touched up with the same materials as the shop coat.

2. All shop coated surfaces which are faded, discolored, or which require more than minor touch up, in the opinion of the Engineer, shall be repainted. Cut edges of galvanized sheets, electrical conduit, and metal pipe sleeves, not to be finish painted, shall be cleaned in accordance with SSPC SP 1, Solvent Cleaning and primed with zinc dust zinc oxide metal primer.

M. Galvanized and Copper Alloy Surfaces

1. All copper, or galvanized metal surfaces shall be brush blasted and given one coat of epoxy primer.

N. Concrete and Masonry Surfaces

1. Concrete and masonry surfaces are to be cured for at least 28 days prior to coating, unless coatings are recommended for application over green concrete surfaces.

2. Test concrete for moisture content using test method recommended by the paint manufacturer. Do not begin surface preparation, or painting until moisture content is acceptable to manufacturer.

3. Non-submerged concrete and masonry surfaces to be painted shall be prepared by removing efflorescence, chalk, dust, dirt, grease, oil, form coating, tar and by roughening to remove glaze. All surfaces shall be repaired prior to commencement of the coating operation.

4. Concrete immersion surfaces that are to be coated shall be brush blasted per SSPC-SP13 to produce the necessary "sandpaper texture" surface required for satisfactory adherence of the paint. Refer to manufacturer’s recommendation for specific coating being applied and adhere to ICRI Concrete Surface Preparation Profiles (CSP 1-9)

when reviewing concrete surface preparation. Areas of concrete which contain bug holes or voids shall be filled with the manufacturer's approved filler material.

O. Existing Painted Surfaces

1. Totally remove existing paint when: surface is to be submerged in a severe environment, paint is less than 75% intact, brittle, eroded or has underfilm rusting.

2. Surfaces which are greater than 75% intact require removal of failed paints and then spot primed. Spot priming is in addition to coats specified.

3. Remove surface contamination such as oil, grease, loose paint, mill scale, dirt, foreign matter, rust, mold, mildew, mortar, efflorescence, and sealers.

4. Clean and dull glossy surfaces prior to painting in accordance with the manufacturer's recommendations.

5. Check existing paints for compatibility with new paint system. If incompatible, totally remove existing paint system or apply a barrier coat recommended by the paint manufacturer. Remove existing paints of undetermined origin. Prepare a test patch of approximately 3 square feet over existing paint. Allow test patch to dry thoroughly and test for adhesion. If proper adhesion is not achieved remove existing paint and repaint.

P. PVC Pipe Surfaces

1. All pipe surfaces shall be cleaned and lightly sanded before painting.

3.02 SHOP PAINTING

A. All fabricated steel work and equipment shall receive at the factory at least one shop coat of prime paint compatible with the paint system required by these Specifications. The Contractor shall coordinate all shop priming to ensure compatibility with paint system specified. Surface preparation prior to shop painting shall be as specified herein. Finish coats may be applied in the shop if acceptable to the Engineer. All shop painted items shall be properly packaged and stored until they are incorporated in the Work. Any painted surfaces that are damaged during handling, transporting, storage or installation shall be cleaned, scraped, and patched before field painting begins so that Work shall be equal to the original painting received at the shop. Equipment or steel Work that is to be assembled on the site shall likewise receive a minimum of one shop coat of paint at the factory. Surfaces of exposed members that will be inaccessible after erection shall be prepared and painted before erection.

B. The Contractor shall specify the shop paints to be applied when ordering equipment in order to assure compatibility of shop paints with field paints. The paints and surface preparation used for shop coating shall be identified on shop drawings submitted to the Engineer for review. Shop paint shop drawings will not be reviewed until the final project paint system has been submitted by the Contractor and reviewed by the Engineer.

C. Shop finish coats may be the standard finish as ordinarily applied by the manufacturer if it can be demonstrated to the Engineer that the paint system is equal to and compatible with the paint system specified. However, all pumps, motors and other equipment shall receive at least one field applied finish coat after installation.

3.03 PAINT SCHEDULE

A. The Contractor shall adhere to this paint schedule, providing those paints named or equal. DFT shall mean the minimum dry film thickness per application measured in mils. Products are referenced by numbers listed in table 09850-1 in Article 2.01 of this Section entitled "Product Listing." The paint schedule identifies the minimum DFT required per coat. If the Contractor does not achieve the specified DFT range in a single coat, he shall provide additional coats as necessary at no additional cost to the Owner. Some surfaces defined for coatings in the schedule below are Alternate Bid Items, at the CITY's option; refer to the Proposal Bid Form to define Alternate Bid Items

B. All interior concrete surfaces of the wet well shall be coated in accordance with Section 09900 – Special Coating.

C. Metal Surfaces, Exterior (Atmospheric) Exposure:

1. Metal surfaces exposed to the atmosphere that do not come into contact with wastewater or corrosive atmosphere including the following types of surfaces shall be painted as described below:

a. Pumps, motors, machinery, etc.

b. Above ground piping, valves, appurtenances and pipe supports.

c. Miscellaneous steel shapes, angles, etc.

d. Exposed non factory painted surfaces of electric panels, conduit, ventilation fans, air conditioning units, duct work, etc.

Application	No.	Description	DFT
First - 1 coat[1]	105	Hi-Build Epoxoline II	3.0 – 5.0
Second - 1 coat	105	Hi-Build Epoxoline II	2.0 – 4.0
Finish - 1 coat	110	Endura Shield	2.0 – 4.0
		Min. Total	10.0 Mils

D. Metal Surfaces, Interior (Atmospheric) Exposure:

1. Interior metal surfaces (nonsubmerged, atmospheric exposure) including but not limited to the following types of surfaces, shall be painted as follows:

a. Pumps, motors, machinery, etc.

b. Piping, valves, appurtenances and supports.

c. Miscellaneous steel shapes, angles, rails, etc.

d. Exposed surfaces of electric panels, conduit, ventilation fans, air conditioning units, duct work, etc.

Application	No.	Description	DFT
First Coat	105	Hi-Build Epoxoline II	3.0 – 5.0
Finish Coat	105	Hi-Build Epoxoline II	4.0 – 6.0
		Min. Total	9.0 Mils

E. Metal Surfaces, Wastewater or Wastewater Gas Exposure:

1. Metal surfaces that come in contact with wastewater or wastewater gases, including but not limited to the following surfaces shall be painted as follows:

   a. Miscellaneous stop plates, weir gates and other metals used in submerged applications.

Application	No.	Description	DFT
Primer*	124	Hi-Solid Epoxy	6.0 – 8.0
Finish	124	Hi-Solid Epoxy	6.0 – 8.0
		Min. Total	12.0 Mils

*Apply a Stripe Coat of primer by brush or roller to all weld seams prior to spray application of primer.

F. PVC Pipes and Appurtenances, Exterior or Interior Exposure:

1. PVC and CPVC pipes, valves, and accessories, shall receive the following types of paint:

Interior

Application	No.	Description	DFT
Finish – 1 coat	105	Hi-Build Epoxoline II	4.0 – 6.0

Exterior

Application	No.	Description	DFT
First – 1 coat	105	Hi-Build Epoxoline II	2.0 – 3.0
Finish – 1 coat	110	Endura Shield	2.0 – 3.0
		Min. Total	5.0 Mils

G. Concrete and Masonry Surfaces, Interior Atmospheric Exposure:

1. Interior exposed masonry and concrete surfaces which are not included in other coating systems, and are indicated on the Drawings for painting including the following types of surfaces shall be painted as described below:

   a. New building interior masonry and concrete walls, columns, beams and ceilings.

b. Existing painted masonry and concrete surfaces indicated on the Drawings to be painted or surfaces that are disturbed due to construction activity.

Application	No.	Description	DFT
Block Filler	102	Epoxy – Polyamide Masonry Filler	80 – 100 (sq. ft./gal)
Second - 1 coat	105	Hi-Build Epoxoline II	4.0 - 6.0
Finish - 1 coat	105	Hi-Build Epoxoline II	4.0 - 6.0
		Min. Total	10.0 Mils & Filler

H. Concrete, Stucco and Masonry Surfaces, Exterior Exposure, Water Bearing and Non-Water Bearing Structures:

Application	No.	Description	DFT
Block Filler	102	Epoxy – Polyamide Masonry Filler	80 – 100 (sq. ft./gal)
First Coat	111	Sand Textured Acrylic	4.0 - 6.0
Finish Coat	111	Sand Textured Acrylic	4.0 - 6.0
		Min. Total	10.0 Mils

I. Concrete Surfaces Wastewater / Wastewater Gas Exposure (wastewater and atmospheric exposure):

1. Concrete surfaces in contact with wastewater or wastewater gases:

Application	No.	Description	DFT
Sealer	121	Water Proofing	1/16-inch
Finish Coat	122	Water Proofing	1/16-inch
		Total	1/8-inch

J. Concrete Surfaces, Buried Exposure:

1. Exterior surfaces shall be coated from the footing up to six inches below finished grade.

Application	No.	Description	DFT
Finish – 1 coat	117	Epoxy, coal tar (Hi-Build)	16.0
		Min. Total	16.0 Mils

K. Gypsum Wallboard Surfaces:

1. All exposed gypsum wallboard surfaces shall be coated as follows:

Application	No.	Description	DFT

Primer – 1 coat	100	Drywall Primer	1.0 – 2.0
Finish – 2 coats	109	Acrylic	2.0 – 3.0 each
		Min. Total	6.0 Mils

3.04 PAINTING

A. All paint shall be applied by experienced painters with brushes or other applicators acceptable to the Engineer.

B. Paint shall be applied without runs, sags, thin spots, or unacceptable marks. Paints shall be applied at the rate specified by the manufacturer to achieve the minimum dry mil thickness required. Additional coats of paint shall be applied, if necessary, to obtain thickness specified.

C. Paint shall be applied with spraying equipment only on those surfaces approved by the Engineer. If the material has thickened or must be diluted for application by spray gun, each coat shall be built up to the same film thickness achieved with undiluted brushed on material. Where thinning is necessary, only the products of the particular manufacturer furnishing the paint shall be used; and all such thinning shall be done in strict accordance with the manufacturer's instructions, as well as with the full knowledge of the Engineer.

D. Surfaces not accessible to brushes or rollers may be painted by spray by dauber or sheepskins and paint mitt. If any of these methods is to be used, it shall be done in strict accordance with the manufacturer's instructions, as well as with the full knowledge of the Engineer.

E. Drying Time

1. A minimum of twenty four hours drying time shall elapse between applications of any two coats of paint on a particular surface unless shorter time periods are a requirement of the manufacturer or specified herein. Longer drying times shall be required for abnormal conditions as defined by the manufacturer.

F. Weather Restrictions

1. No painting whatsoever shall be accomplished in rainy or excessively damp weather when the relative humidity exceeds 85 percent, or when the general air temperature cannot be maintained at 50 degrees Fahrenheit or above throughout the entire drying period. No paint shall be applied when it is expected that the relative humidity will exceed 85 percent or that the air temperature will drop below 50 degrees Fahrenheit within 18 hours after the application of the paint.

2. Dew or moisture condensation should be anticipated; and if such conditions are prevalent, painting shall be delayed until midmorning to be certain the surfaces are dry. The day's painting shall be completed well in advance of the probable time of day when condensation will occur.

G. Inspection of Surfaces

1. Each and every field coat of priming and finishing paint shall be inspected by the Engineer or his authorized representative before the succeeding coat is applied. The

Contractor shall follow a system of tinting successive paint coats so that no two coats for a given surface are exactly the same color. Areas to receive black protective coatings shall in such cases be tick marked with white or actually gauged as to thickness when finished.

2. Before application of the prime coat and each succeeding coat, any defects or deficiencies in the prime coat or succeeding coat shall be corrected by the Contractor before application of any subsequent coating.

3. Samples of surface preparation and of painting systems shall be furnished by the Contractor to be used as a standard throughout the job, unless omitted by the Engineer.

4. When any appreciable time has elapsed between coatings, previously coated areas shall be carefully inspected by the Engineer, and where, in his opinion, surfaces are damaged or contaminated, they shall be cleaned and recoated at the Contractor's expense. Recoating times of manufacturer's printed instructions shall be adhered to.

5. Coating thickness shall be verified by the use of a dry film thickness digital gauge. Gauge shall be Elcometer 456 or equal and shall be properly calibrated. Coating thickness on non-metal surfaces shall be verified by the use of a wet film thickness gauge. Gauges shall include the entire range of coating thicknesses required in this section.

6. The Contractor shall provide free of charge to the Engineer two new digital dry film gauges and two wet film gauges to be used to inspect coating by Engineer and Contractor. One gauge may be used by Contractor and returned each day to the Engineer. Engineer will return gauges to Contractor at completion of job.

7. Coatings shall pass a holiday detector test.

8. Determination of Film Thickness: Randomly selected areas, each of at least 107.5 contiguous square feet, totaling at least 5% of the entire control area shall be tested. Within this area, at least 5 squares, each of 7.75 square inches, shall be randomly selected. Three readings shall be taken in each square, from which the mean film thickness shall be calculated. No more than 20 percent of the mean film thickness measurements shall be below the specified thickness. No single measurement shall be below 80 percent of the specified film thickness. Total dry film thickness greater than twice the specified film thickness shall not be acceptable. Areas where the measured dry film thickness exceeds twice that specified shall be completely redone unless otherwise approved by the Engineer. When measured dry film thickness is less than that specified additional coats shall be applied as required.

9. Holiday Testing: Holiday test painted ferrous metal surfaces which will be submerged in water or other liquids, or surfaces which are enclosed in a vapor space in such structures. Mark areas which contain holidays. Repair or repaint in accordance with paint manufacturer's printed instructions and retest.

    a. Dry Film Thickness Exceeding 20 Mils: For surfaces having a total dry film thickness exceeding 20 mils: Pulse-type holiday detector such as Tinker & Rasor Model AP-W, D.E. Stearns Co. Model 14/20, shall be used. The unit shall be adjusted to operate at the voltage required to cause a spark jump across an air gap equal to twice the specified coating thickness.

b. Dry Film Thickness of 20 Mils or Less: For surfaces having a total dry film thickness of 20 mils or less: Tinker & Rasor Model M1 non-destructive type holiday detector, K-D Bird Dog, shall be used. The unit shall operate at less than 75-volts. For thicknesses between 10 and 20 mils, a non-sudsing type wetting agent, such as Kodak Photo-Flow, shall be added to the water prior to wetting the detector sponge.

H. Special Areas

1. All surfaces which are to be installed against concrete, masonry etc., and will not be accessible for field priming and/or painting shall be back primed and painted as specified herein, before erection. Anchor bolts shall be painted before the erection of equipment and then the accessible surfaces repainted when the equipment is painted.

I. Special attention shall be given to insure that edges, corners, crevices, welds and rivets receive a film thickness equivalent to that of the adjacent painted surfaces.

J. Safety

1. Respirators shall be worn by persons engaged or assisting in spray painting. The Contractor shall provide ventilating equipment and all necessary safety equipment for the protection of the workmen and the Work.

K. Quality Workmanship

1. The Contractor shall be responsible for the cleanliness of his painting operations and shall use covers and masking tape to protect the Work whenever such covering is necessary, or if so requested by the City. Any unwanted paint shall be carefully removed without damage to any finished paint or surface. If damage does occur, the entire surface, adjacent to and including the damaged area, shall be repainted without visible lap marks and without additional cost to the City.

L. Painting found defective shall be scraped or sandblasted off and repainted as the Engineer may direct. Before final acceptance of the Work, damaged surfaces of paint shall be cleaned and repainted as directed by the Engineer.

M. Any pipe scheduled to be painted and having received a coating of a tar or asphalt compound shall be painted with two coats or "Intertol Tar Stop", "Tnemec Tar Bar" or equal before successive coats are applied in accordance with the paint schedule.

3.05 SCHEDULE OF COLORS

A. All colors shall be as designated by the Engineer at the shop drawing review. The Contractor shall submit color samples including custom color choices as required to the Engineer as specified in Article 1.05 of this Section. The Contractor shall submit suitable samples of all colors and finishes for the surfaces to be painted, or on portable surfaces when required by the Engineer. The Engineer shall decide upon the choice of colors and other finishes when alternates exist. No variation shall be made in colors without the acceptance from the City. Color names and/or numbers shall be identified according to the appropriate color chart issued by the manufacturer of the particular product in question.

B. All above ground water main piping shall be painted white with blue longitudinal striping.

C. All underground water main piping shall have continuous 4” blue longitudinal stripe.

D. All above ground force main piping shall be painted green.

3.06 COLOR CODING AND LETTERING OF PIPING

A. The Contractor shall paint all piping, valves, equipment, exposed conduits and all appurtenances which are integral to a complete functional mechanical pipe and electrical conduit system with colors selected during the shop drawing review from the paint manufacturer's standard color charts.

B. In general, the pumps and equipment shall be painted the same color as the piping system to which it is connected unless otherwise directed by the Engineer. Where colors are not designated for piping and conduit systems they will be selected during the shop drawing review from the paint manufacturer's standard color charts.

C. Lettering of Piping

1. The Contractor shall apply identification titles and arrows indicating the direction of flow of liquids to all types and sections of all new and existing plant piping. Titles shall be as directed by the Engineer. Identification titles shall be located midway between color coding bands where possible. Identification lettering and arrows shall be placed as directed by the Engineer, but shall generally be located each fifteen feet in pipe length and shall be properly inclined to the pipe axis to facilitate easy reading. Titles shall also appear directly adjacent to each side of any wall or slab the pipeline passes through.

D. The titles shall be painted by use of stencils and shall identify the contents by complete names at least once in each area through which it passes and thereafter be abbreviated.

E. Title color shall be black or white as directed and shall have an overall height in inches in accordance with Table 09850-2. Letter type shall be Helvetica Medium upper case. The manufacturer's instructions shall be followed in respect to storage, surface preparation and application. For piping less than 3/4-inch diameter (as identified in Table 09850-2), the Contractor shall furnish and attach corrosion resistant color tags with the required lettering.

F. Banding

1. Where bands are indicated in the Pipe Color Coding Schedule, the pipe is to be painted for its full circumference with a band of the color indicated. The bands shall be six inches wide, neatly made by masking, and spaced eight feet apart. The Contractor may substitute precut prefinished bands on piping subject to acceptance by the Engineer. Where banded pipes are running concurrently in a space, bands shall be located so that on adjacently located pipes, bands will be grouped beside each other.

3.07 OSHA SAFETY COLORS

A. Items listed in ANSI Z53.1-1971, Section 2.1 shall be painted ANSI Red. In general, these items shall include fire protection equipment and apparatus; wall mounted breathing apparatus, danger signs and locations; and stop bars, buttons or switches. In addition all hose valves and riser pipes, fire protection piping and sprinkler systems, and electrical stop switches shall be painted ANSI Red.

B. Items listed in ANSI Z53.1-1971, Section 2.3 shall be painted ANSI Yellow. Yellow shall be the basic color for designating caution and for marking physical hazards such as striking against, stumbling, falling, tripping, and "caught in between". In addition, an 8-inch wide strip on the top and bottom tread of stairways shall be coated.

3.08 WORK IN CONFINED SPACES

A. The Contractor shall provide and maintain safe working conditions for all employees. Fresh air shall be supplied continuously to confined spaces through the combined use of existing openings, forced draft fans, or by direct air supply to individual workers. Paint fumes shall be exhausted to the outside from the lowest level in the contained space.

B. Electrical fan motors shall be explosion proof if in contact with fumes. No smoking or open fires will be permitted in, or near, confined spaces where painting is being done.

3.09 CLEANING

A. The buildings and all other Work area shall be at all times kept free from accumulation of waste material and rubbish caused by the Work. At the completion of the painting, all tools, equipment, scaffolding, surplus materials, and all rubbish around the inside the buildings shall be removed and the Work left broom clean unless otherwise specified.

Table 09850-2
Height of Piping Lettering

Diameter of Pipe or Pipe Covering	Height of Lettering
3/4 to 1-1/4 inches	½ inch
1-1/2 to 2 inches	¾ inch
2-1/2 to 6 inches	1-1/4 inches
8 to 10 inches	2-1/2 inches
Over 10 inches	3-1/2 inches

Notes:

1. *Letter type shall be Helvetica Medium upper case. The manufacturer's instructions shall be followed in respect to storage, surface preparation and application.*
2. *For piping less than ¾-inch diameter (as identified in Table 09850-2), the CONTRACTOR shall furnish and attach corrosion resistant color tags with the required lettering.*

- END OF SECTION -

SECTION 09900 - SPECIALTY COATINGS

PART 1 – GENERAL

1.01 THE REQUIREMENT

A. This Section consists of furnishing and applying special concrete coating systems. The coating shall be applied to the interior concrete surfaces of the wet well walls, ceiling and floors and at all other locations shown on the Drawings.

1.02 QUALITY ASSURANCE

A. The coatings system manufacturer shall provide a representative to visit the jobsite at intervals during surface preparation and coating as may be required for product application quality assurance, and to determine compliance with manufacturer's instructions and these Specifications, and as may be necessary to resolve field problems attributable to, or associated with, the manufacturer's products furnished under this Contract.

B. It is the responsibility of the CONTRACTOR to inspect and provide substrate surfaces that are prepared in accordance with these Specifications and the printed directions and recommendations of the coatings system manufacturer.

C. The coatings system applicator shall have a minimum of five years practical experience in applying specified coatings. Prior to application of any coating, CONTRACTOR shall furnish the CITY with a detailed list of previous jobs and references substantiating the requirement. Records of such use showing project name, Owner's name, engineer's name, date of completion, and results of subsequent inspections and tests shall be submitted as verification of performance. The coating system manufacturer shall submit a letter stating that the proposed applicator is qualified to apply the coatings specified herein.

1.03 DELIVERY AND STORAGE

A. All materials shall be new and shall be delivered to the project site in unopened containers that plainly show, at the time of use, the designated name, date of manufacture, color, and name of manufacturer. Materials shall be stored in a suitable protected area that is heated or cooled as required to maintain temperatures within the range recommended by the manufacturer.

1.04 SAFETY PRECAUTIONS

A. The components of the coating system specified herein may be combustible and/or contain toxic ingredients. The CONTRACTOR is advised that the materials specified herein shall be applied in confined spaces and to take all necessary precautions. Further, the CONTRACTOR is advised that the coating manufacturer's recommendations and instructions relating to use of safety and protective equipment, breathing apparatus, emergency washing facilities, ventilation and protective clothing shall be followed, and the equipment and clothing shall be provided for its personnel and the CITY during the coating process. Access to the work area should be limited and warning signs posted at the entry points.

B. Coating shall be performed in strict accordance with the safety recommendations of the manufacturer; with the safety recommendations of the National Association of Corrosion Engineers contained in the publication, Manual for Painter Safety; and with federal, state, and local agencies having jurisdiction.

1.05 MANUFACTURER'S FIELD SERVICES

A. A manufacturer's representative shall provide on-site inspections and provide site specific recommendations. The representative shall make an initial survey of the surfaces to be coated. Based on the survey, the representative shall recommend the type of preparation required for the application.

B. After surface preparation, the manufacturer's representative shall inspect the prepared surfaces and confirm if the prepared surfaces are sufficient to receive the repair and finish coating materials.

C. During the application of the products, the coating manufacturer's representative shall provide at least two days of on-site observation of each application.

D. After the system is in place and cured, the manufacturer shall inspect the application and issue a written certification that the installation meets its recommended application procedures.

1.06 WARRANTY

A. The specialty coatings (both materials and application) shall be warrantied for a period of five (5) years after the acceptance of the project by the CITY. A copy of the warranty shall be provided with the submittals. A fully executed warranty shall be transmitted to the CITY at the completion of the Contract.

PART 2 – PRODUCTS

2.01 MATERIALS

A. The manufacturer shall inspect and accept the nature and condition of all existing surfaces. An inspection shall be made prior to and after surface preparation procedures by the applicator.

B. The coating manufacturer shall accept the patching materials. Project specific submittals shall be provided including application, cure time and surface preparation procedures which permit optimum bond strength with the specified coating.

C. Applicator shall maintain strict adherence to applicable NACE and SSPC recommendations with regard to proper surface preparation and compatibility with existing coatings.

2.02 MANUFACTURER, OR APPROVED EQUAL

A. Epoxytec International, Hollywood, Florida

2.03 MATERIALS, GENERAL

A. The manufacturer shall inspect and accept the nature and condition of all existing surfaces. An inspection shall be made prior to and after surface preparation procedures by the applicator.

B. Patch and repair materials shall be manufactured by and shall be certified for compatibility by the coatings manufacturer.

2.04 CEMENTITIOUS PATCH MATERIALS

A. Cementitious patch materials shall be used to make vertical and overhead repairs from ¼ inch to 2 inches in depth. Cementitious patch materials shall be compatible with the specified coating.

B. Cementitious patch materials shall be Epoxytec MortarTec Silicate (High density, microsilica modified mortar. For rebuilding, repair, resurfacing concrete with structural enhancement of 10,000 plus psi).

C. To provide the best substrate prior to coating application, the CONTRACTOR shall provide and apply cementitious patch materials for **the ENTIRE INTERIOR SURFACE OF THE WET WELL** to be rehabilitated under this Contract.

D. No additional compensation will be provided to the CONTRACTOR for failure to include cementitious patching of the entire interior of each wet well in the Bid price.

E. CONTRACTOR shall follow all manufacturer recommendations/instructions including but not limited to surface preparation, mixing, application and clean up as provided for in product literature.

2.05 EPOXY PATCH MATERIALS

A. Epoxy patch materials shall be used to seal cracks, crevasses, bugholes, and spalls less than ½ inch in depth.

B. Epoxy patch material shall be Epoxytec CPP (Compound Polymer Paste)

C. CONTRACTOR shall follow all manufacturer recommendations/instructions including but not limited to surface preparation, mixing, application and clean up as provided for in product literature.

2.06 COATING

A. **WET WELL** coating for concrete shall be:

1. Epoxytec Uroflex (Urethane-Modified Epoxy [UME] Coating)

2. Coating shall be spray or roller applied in two coats, for a total thickness of 50 mils.

3. Color of coating to be selected during shop drawing review by the CITY.

B. **VALVE VAULT** coating for concrete shall be:

1. Epoxytec CRM Modified – non-skid (Clear Coat, Amine Cured Epoxy)

2. Coating shall be roller/brush applied in 2 coats, for a total DFT of 30 mils.

C. CONTRACTOR shall follow all manufacturer recommendations/instructions including but not limited to surface preparation, mixing, application and clean up as provided for in product literature.

PART 3 – EXECUTION

3.01 GENERAL

A. All materials of the coating system, including patching compounds, base and finish coats are specified herein to be produced by the final coating manufacturer. Thinners, cleaners, driers, and other additives shall be as recommended by the coatings manufacturer.

3.02 PROTECTION OF MATERIAL NOT TO BE COATED

A. Remove, mask, or otherwise protect hardware, stainless steel or fiberglass surfaces, machined surfaces, and other surfaces not intended to be coated. Provide drop cloths to prevent coating materials from falling on or marring adjacent surfaces. Protect working parts of mechanical equipment from damage during surface preparation and coating processes.

3.03 ACCEPTABLE APPLICATORS

A. Specialty coatings shall be applied by a Certified Applicator of the coating manufacturer and according to the manufacturer's specifications. A letter from the coating manufacturer stating this fact shall be submitted by the CONTRACTOR during the shop drawing review process.

3.04 EXAMINATION

A. All structures to be coated shall be inspected by the coating manufacturer.

B. Temperature of the surface to be coated shall be maintained between 65 degrees Fahrenheit and 80 degrees Fahrenheit during application. Prior to and during application, care should be taken to avoid exposure of direct sunlight or other intense heat source to the structure being coated. Where varying surface temperatures do exist, care shall be taken to apply the coating when the surface temperature is falling versus rising (i.e. late afternoon into evening as opposed to morning into afternoon).

3.05 SURFACE PREPARATION

A. CONTRACTOR shall inspect all surfaces specified to receive a protective coating prior to surface preparation. Applicator shall notify City of any noticeable disparity in the surfaces which may interfere with the proper preparation or application of the repair mortar and protective coating. Water infiltration through cracks, holes, or weeping must be eliminated prior to application of the coating.

B. All concrete that is not sound or has been damaged shall be removed to a sound concrete surface. All voids, holes, or irregular concrete shall be filled per the requirements and recommendations of the protective-coating manufacturer.

C. All contaminants including: oils, grease, unsound or incompatible existing coatings, waxes, form release, curing compounds, efflorescence, sealers, salts, or other contaminants shall be removed.

D. Surface preparation method(s) shall be based upon the conditions of the substrate and the requirements of the coating manufacturer. The manufacturer shall inspect the surfaces to be prepared.

E. Surfaces to receive protective coating shall be cleaned and abraded to produce a sound concrete surface to provide a strong bond between the coating and the substrate. A texture of 40 to 60 grit sandpaper shall be the acceptable profile for the substrate. Hydroblasting or other methods such as high pressure water jetting (NACE Standard No. 5/SSPC-SP12), abrasive sandblasting, shotblasting, grinding, scarifying or acid etching may also be used at the option of the CONTRACTOR at no additional cost to the CITY. Detergent water cleaning and hot water blasting may be necessary to remove oils, grease or other hydrocarbon residues from the concrete. Whichever method(s) are used, they shall be performed in a manner that provides a uniform, sound clean neutralized surface that is not excessively damaged. The method shall be approved by the coating manufacturer.

F. Test prepared surfaces after cleaning but prior to application of the coating to determine if a specific pH or moisture content of the concrete is required according to manufacturer's recommendations.

G. All surfaces should be inspected after surface preparation by the coating manufacturer before coatings and/or repair materials are applied.

3.06 APPLICATION OF PATCH MATERIALS

A. After the application of the primer, spalled or damaged surfaces or pinholes in concrete shall be patched using patch materials specified herein.

B. Installation of patch materials shall meet the specifications contained herein. The materials shall be trowelled on to specified surfaces to provide a smooth surface with an average profile equivalent to coarse sandpaper to optimally receive the protective coating. No bugholes or honeycomb surfaces should remain after the final trowel procedure of the repair material.

C. The repair materials shall be permitted to cure according to manufacturer recommendations.

D. All surfaces shall be inspected by the manufacturer after preparation and before the final coating is applied.

3.07 APPLICATION OF PRIMERS

The CONTRACTOR is cautioned that the substrates to be coated under these specifications are under a significant head of groundwater. Substrates shall be expected to be moist. In some cases, a primer compatible with the specified coating may become necessary. In that case, upon recommendation by the manufacturer, the CONTRACTOR shall furnish and install a primer to mitigate the effect of moisture in the substrate at no additional cost to the CITY. Primer shall be compatible with the finish coating.

3.08 APPLICATION OF SPECIALTY COATING

A. Application procedures shall conform to the recommendations of the protective coating manufacturer, including material handling, mixing, environmental controls during application, safety, and application equipment. Substrate surfaces shall be dry before application.

B. The coating material shall be spray applied by a Certified Applicator of the coating manufacturer.

C. Specified surfaces shall be coated by spray-on application of the specified coating to the specified minimum total thickness. When specified, the coating shall be applied in two coats.

D. Subsequent topcoating or additional coats of the protective coating shall occur as soon as the basecoat becomes tack free, ideally within 12 hours but no later than 24 hours after the prior coat has been applied at 75 deg F unless additional prior coat surface preparation is performed. Care shall be taken to protect the previously coated surfaces from dew and moisture formation. The coating manufacturer shall be consulted for any additional surface preparation guidelines if necessary.

3.09 TESTING AND INSPECTION

A. The applicator shall supply the testing equipment and provide the measurements or testing in the presence of the CITY at locations selected by the CITY. Test reports shall be submitted by the CONTRACTOR for each test performed.

B. During application, a wet film thickness gage, such as those available through Paul N. Gardner Company, Inc. meeting ASTM D4414 - Standard Practice for Measurement of Wet Film Thickness of Organic Coatings by Notched Gages, shall be used to ensure a monolithic coating and uniform thickness during application.

C. After the coating has set hard to the touch, and after a minimum 24-hour cure, it shall be inspected with high-voltage holiday detection equipment. An induced holiday shall be made on to the coated concrete surface and shall serve to determine the minimum/maximum voltage to be used to test the coating for holidays at that particular area. The spark tester shall be initially set at 100 volts per 1 mil (25 microns) of film thickness applied but may be adjusted as necessary to detect the induced holiday. All detected holidays shall be marked and repaired by abrading the coating surface with grit disk paper or other hand tooling method. After abrading and cleaning, additional protective repair coating material shall be hand applied to the repair area. All touch-up/repair procedures shall follow the coating manufacturer's recommendations. Such tests shall be scheduled, conducted and paid for by the CONTRACTOR. Test reports shall be submitted to the CITY for review.

D. Measurement of bond strength of the protective coating to the substrate shall be made at each 100 sf sections of the structure. Bond strength shall be measured in accordance with ASTM D4541. Any areas detected to have inadequate (less than 300 psi to concrete) bond strength will be evaluated by the manufacturer and repair procedures shall be implemented by the CONTRACTOR in strict accordance with the manufacturer’s recommendations. Further bond tests may be performed in that area to determine the extent of potentially deficient bonded area and repairs shall be made by the CONTRACTOR in strict accordance with manufacturer's recommendations.

E. A final visual inspection shall be made by the CITY and the manufacturer's representative. Any deficiencies in the finished coating shall be marked and repaired according to the procedures specified by the manufacturer.

F. The system shall be put into service only when the final inspection by the CITY and the manufacturer has taken place. A minimum of seven days of curing shall be provided prior to hydraulic testing of structure and placing in service.

3.10 CLEANUP

A. All cloths and waste that might constitute a fire hazard shall be placed in closed metal containers, or disposed of in an acceptable manner at the end of each day. Upon completion of the work, all staging, scaffolding, and containers shall be removed from the site. Resin spots, oil, or stains upon adjacent surfaces and floors shall be completely removed, and the entire job left clean and acceptable to the CITY.

- - END OF SECTION - -

SECTION 11000 - EQUIPMENT GENERAL PROVISIONS

PART 1 – GENERAL

1.01 THE REQUIREMENT

A. This Section consists of providing all tools, supplies, materials, equipment, and all labor necessary for the furnishing, construction, installation, testing, and operation of all equipment and appurtenant work, complete and operable as shown in the Drawings and/or as specified herein.

B. The provisions of this Section shall apply to all equipment specified and where referred to, except where otherwise specified or shown.

1.02 RELATED WORK SPECIFIED ELSEWHERE

A. Piping, fittings, and valves as applicable.

B. Metals.

C. Painting.

1.03 REFERENCE SPECIFICATIONS, CODES, AND STANDARDS

A. Commercial Standards: All equipment, products, and their installation shall be in accordance with the following standards, as applicable, and as specified in each Section of these specifications:

1. American Society for Testing and Materials (ASTM).
2. American Public Health Association (APHA).
3. American National Standards Institute (ANSI).
4. American Society of Mechanical Engineers (ASME).
5. American Water Works Association (AWWA).
6. American Society of Heating, Refrigerating, and Air Conditioning Engineers (ASHRAE).
7. American Welding Society (AWS).
8. National Fire Protection Association (NFPA).
9. Federal Specifications (PS).
10. National Electrical Manufacturers Association (NEMA).
11. Manufacturer's published recommendations and specifications.
12. General Industry Safety Orders (OSHA).

13. American Gear Manufacturers Association (AGMA).

14. American Hot Dip Galvanizers Association (AHDGA).

15. American Standards Association (ASA).

16. National Association of Corrosion Engineers (NACE).

17. Anti-Friction Bearing Manufacturers Association, Inc. (AFMBA).

18. Underwriters' Laboratories, Inc. (UL).

B. The following standards have been referred to in this Section of the specifications:

ANSI B1	CAST IRON PIPE FLANGES AND FLANGED FITTINGS CLASS 25, 125, AND 250
ANSI B1	PIPE FLANGES AND FLANGED FITTINGS
ANSI B46.1	SURFACE TEXTURE, SURFACE ROUGHNESS, WAVINESS, AND LAY
ANSI S1	METHOD FOR THE MEASUREMENT OF THE REAL-EAR ATTENUATION OF HEARING PROTECTORS
ANSI/ASME BL.20.1	GENERAL PURPOSE PIPE THREADS (INCH)
ANSI/ASME B3	POWER PIPING
ANSI/AWWA D100	WELDED STEEL TANKS FOR WATER STORAGE
AWWA C206	FIELD WELDING OF STEEL WATER PIPE
ASTM A48	SPECIFICATION FOR GRAY IRON CASTINGS
ASTM A108	SPECIFICATION FOR STEEL BAR, CARBON, COLD-FINISHED, STANDARD QUALITY

1.04 QUALITY ASSURANCE

A. Inspection, Startup, and Field Adjustment: The CONTRACTOR shall demonstrate that all equipment meets the specified performance requirements. CONTRACTOR shall provide the services of an experienced, competent, and authorized service representative of the manufacturer of each item of major equipment who shall visit the site of Work, and as necessary, to perform the following tasks:

1. Assist the CONTRACTOR in the installation of the equipment.

2. To inspect, check, adjust if necessary and approve the equipment installation.

3. To start-up and field-test the equipment for proper operation, efficiency, and capacity.

4. To perform necessary field adjustments during the test period until the equipment installation and operation are satisfactory to the CITY.

5. To instruct the CITY's personnel in the operation and maintenance of the equipment.

B. Costs: The costs of all inspection, startup, testing, adjustment, and instruction work performed by said factory-trained representatives shall be borne by the CONTRACTOR.

C. Public Inspection: It shall be the responsibility of the CONTRACTOR to inform the local authorities, such as building and plumbing inspectors, fire marshal, OSHA inspectors, and others, to witness all required tests for piping, plumbing, fire protection systems, pressure vessels, safety systems, etc., to obtain all required permits and certificates, and pay all fees.

D. Tolerances: Tolerances and clearances shall be as shown on the shop drawings and shall be closely adhered to. Machine work shall in all cases be of high-grade workmanship and finish, with due consideration to the special nature or function of the parts. Members without milled ends and which are to be framed to other steel parts of the structure may have a variation in the detailed length of not greater than 1/16 of an inch for members 30 feet or less in length, and not greater than 1/8 of an inch for members over 30 feet in length.

E. Machine Finish: The type of finish shall be the most suitable for the application and shall be shown in micro-inches in accordance with ANSI B46.1. The following finishes shall be used:

1. Surface roughness not greater than 63 micro-inches shall be required for all surfaces in sliding contact.

2. Surface roughness not greater than 250 micro-inches shall be required for surfaces in contact where a tight joint is not required.

3. Rough finish not greater than 500 micro-inches shall be required for other machined surfaces.

4. Contact surfaces of shafts and stems which pass through stuffing boxes and contact surfaces of bearings shall be finished to not greater than 32 micro-inches.

F. Manufacturer's Experience: Unless otherwise directed by the CITY, all equipment furnished shall have a record of at least 5 years of successful, trouble free operation in similar applications, from the same manufacturer.

1.05 CLEANUP

A. After completion of the installation and testing, the CONTRACTOR shall remove all debris from the site, clean all equipment and controls, and hand over its work in perfect operating condition.

1.06 GUARANTEES, WARRANTIES

A. After completion, the CONTRACTOR shall furnish to the CITY the manufacturer's written guarantees that the equipment will meet all requirements of these specifications. The CONTRACTOR shall also furnish the manufacturer's warranties as published in its literature and as specified.

PART 2 – PRODUCTS

2.01 GENERAL REQUIREMENTS

A. Noise Level: When in operation, no single piece of equipment shall exceed the OSHA noise level requirements for a one hour exposure.\

B. Service Factors: Service factors shall be applied in the selection or design of mechanical power transmission components. Unless otherwise specified, the following load classifications shall apply in determining service factors:

Type of Equipment	Load Classification
Pumps	Uniform

C. For service factors of electric motors, see Section entitled "Electric Motors." Where load classifications are not specified, best modern practice shall be used.

D. Welding: Unless otherwise specified or shown, all welding shall conform to the following:

1. ANSI/AWWA D100.

2. AWWA C206.

3. All composite fabricated steel assemblies which are to be erected or installed inside a hydraulic structure, including any fixed or movable structural components of mechanical equipment, shall have continuous seal welds to prevent entrance of air or moisture.

4. All welding shall be by the metal-arc method or gas-shielded arc method as described in the American Welding Society's "Welding Handbook" as supplemented by other pertinent standards of the AWS. Qualification of welders shall be in accordance with the AWS Standards governing same.

5. In assembly and during welding, the component parts shall be adequately clamped, supported, and restrained to minimize distortion and for control of dimensions. Weld reinforcement shall be as specified by the AWS code. Upon completion of welding, all weld splatter, flux, slag, and burrs left by attachments shall be removed. Welds shall be repaired to produce a workmanlike appearance, with uniform weld contours and dimensions. All sharp corners of material which is to be painted or coated shall be ground to a minimum of 1/32-inch on the flat.

E. Protective Coatings.

1. All equipment shall be painted or coated in accordance with Section 09850, "Painting," unless otherwise approved by the CITY. Non-ferrous metal rotating/lubricated and corrosion-resisting steel surfaces shall be coated with grease or lubricating oil. Coated surfaces shall be protected from abrasion or other damage during handling, testing, storing, assembly, and shipping.

2. Gears, bearing surfaces, and other similar surfaces obviously not to be painted shall be given a heavy shop coat of grease or other suitable rust-resistant coating. This coating shall be maintained as necessary to prevent corrosion during periods of storage and erection and shall be satisfactory to the CITY up to the time of the final acceptance.

F. Protection of Equipment: All equipment shall be boxed, crated, or otherwise protected from damage and moisture during shipment, handling, and storage. All equipment shall be protected from exposure to corrosive fumes and shall be kept thoroughly dry at all times.

G. Equipment having moving parts such as gears, electric motors, etc. and/or instruments, control panels, switchgear shall be stored in a temperature and humidity controlled building until such time as the equipment is to be installed.

H. Equipment with electric motors having space heaters shall have the space heaters energized unless stored in a temperature and humidity controlled building. Space heaters shall be energized at the time of installation and maintained until acceptance of the equipment.

I. For exterior storage of fabricated products, the items shall be placed on sloped supports above ground. Products subject to deterioration shall be covered with impervious sheet covering; ventilation shall be provided to avoid condensation.

J. Identification of Equipment Items: Each item of equipment shipped shall have a legible identifying mark corresponding to the equipment number shown or specified for the particular item.

K. Vibration Level: All equipment subject to vibration shall be provided with restrained spring-type vibration isolators or pads per manufacturer's written recommendations.

L. Shop Fabrication: Shop fabrication shall be performed in accordance with the Contract Documents and the final reviewed and processed shop drawings.

2.02 EQUIPMENT SUPPORTS AND FOUNDATIONS

A. Equipment Supports: All equipment supports, anchors, and restrainers shall be adequately designed for static and dynamic loads.

B. Equipment Foundations: Equipment foundations shall be revised to meet manufacturer's written recommendations if necessary. All mechanical equipment, tanks, control cabinets, etc. shall be mounted on minimum 4-inch high concrete bases, as shown on standard structural details, unless otherwise shown or specified.

2.03 PIPE HANGERS, SUPPORTS, AND GUIDES

A. All pipe connections to equipment shall be supported, anchored, and guided to avoid stresses and loads on equipment flanges and equipment.

2.04 FLANGES AND PIPE THREADS

A. All flanges on equipment and appurtenances provided under this Section shall conform to ANSI B16.1, Class 125; or B16.5, Class 150, unless otherwise shown. All pipe threads shall be in accordance with ANSI/ASME Bl.20.1, in accordance with requirements of Section 15000, "Piping, General."

2.05 COUPLINGS

A. Flexible couplings shall be provided between the driver and the driven equipment to accommodate angular misalignment, parallel misalignment, end float, and to cushion shock loads. Where required for vertical shafts, 3-piece spacer couplings shall be installed, except where otherwise acceptable to the CITY.

B. The CONTRACTOR shall have the equipment manufacturer select or recommend the size and type of coupling required to suit each specific application.

C. Taperlock bushings may be used to provide for easy installation and removal on shafts of various diameters.

D. Where universal type couplings are shown, they shall be of the needle bearing type construction, equipped with commercial type grease fittings.

E. Flexible couplings shall be as manufactured by Woods Corp., or equal, unless specified otherwise in the equipment specification.

2.06 SHAFTING

A. General: All shafting shall be continuous between bearings and shall be sized to transmit the power required. Keyways shall be accurately cut in line. Shafting shall not be turned down at the ends to accommodate bearings or sprockets whose bore is less than the diameter of the shaft. All shafts shall rotate in the end bearings and shall be turned and polished, straight, and true.

B. Materials: Shafting materials shall be appropriate for the type of service and torque transmitted. Environmental elements such as corrosive gases, moisture, and fluids shall be taken into consideration. Materials shall be as shown or specified unless furnished as part of an equipment assembly.

1. Low carbon cold-rolled steel shafting shall conform to ASTM A108, Grade 1018.

2. Medium carbon cold-rolled shafting shall conform to ASTM A108, Grade 1045.

3. Corrosion-resistant shafting shall be stainless steel or Monel, whichever is most suitable for the intended service.

C. Differential Settlement: Where differential settlement between the driver and the driven equipment may be expected, a shaft of sufficient length with 2 sets of universal type couplings shall be provided.

2.07 BEARINGS

A. General: Bearings shall conform to the standards of the Anti-Friction Bearing Manufacturers Association, Inc. (AFBMA).

B. To assure satisfactory bearing application, fitting practice, mounting, lubrication, sealing, static rating, housing strength, and other important factors shall be considered in bearing selection.

C. All grease-lubricated type bearings shall be equipped with hydraulic grease fitting in an accessible location and shall have sufficient grease capacity in the bearing chamber.

D. All lubricated-for-life bearings shall be factory-lubricated with the manufacturer's recommended grease to insure maximum bearing life and best performance.

E. Bearing Life: Except where otherwise specified or shown, all bearings shall have a minimum L-10 life expectancy of 60,000 hours.

F. Bearing housings shall be of cast iron or steel and bearing mounting arrangement shall be as specified or shown, or as recommended in the published standards of the manufacturer. Split-type housings may be used to facilitate installation, inspection, and disassembly.

G. Sleeve-type bearings shall have a Babbitt or bronze liner.

2.08 GEARS AND GEAR DRIVES

A. Unless otherwise specified, gears shall be of the helical or spiral-bevel type, designed and manufactured in accordance with AGMA Standards, with a minimum service factor of 1.7, a minimum L-10 bearing life of 60,000 hours and a minimum efficiency of 94 percent. Worm gears shall not be used, unless specifically accepted by the CITY.

B. All gear speed reducers or increasers shall be of the enclosed type, oil- or grease-lubricated and fully sealed, with a breather to allow air to escape but keep dust and dirt out. The casing shall be of cast iron or heavy duty steel construction with lifting lugs and an inspection cover for each gear train. An oil level sight glass and an oil flow indicator shall be provided, arranged for easy reading.

C. Gears and gear drives as part of an equipment assembly shall be shipped fully assembled for field installation.

D. Material selections shall be left to the discretion of the manufacturer, provided the above AGMA values are met. Input and output shafts shall be adequately designed for the service and load requirements. Gears shall be computer-matched for minimum tolerance variation. The output shaft shall have 2 positive seals to prevent oil leakage.

E. Oil level and drain location relative to the mounting arrangement shall be easily accessible. Oil coolers or heat exchangers with all required appurtenances shall be furnished when necessary.

F. Where gear drive input or output shafts have to connect to couplings or sprockets supplied by others, the CONTRACTOR shall have the gear drive manufacturer supply matching key taped to the shaft for shipment.

2.09 SPROCKETS

A. General: Sprockets shall be used in conjunction with all chain drives and chain-type material handling equipment.

B. Materials: Unless otherwise specified, materials shall be as follows:

1. Sprockets with 25 teeth or less, normally used as a driver, shall be made of medium carbon steel in the 0.40 to 0.45 percent carbon range.

2. Type A and B sprockets with 26 teeth or more, normally used as driven sprockets, shall be made of minimum 0.20 percent carbon steel.

3. Large diameter sprockets with Type C hub shall be made of cast iron conforming to ASTM A48, Class 30.

C. All sprockets shall be accurately machined to ANSI Standards. Sprockets shall have deep hardness penetration in tooth sections.

D. Finish bored sprockets shall be furnished complete with keyseat and set screws.

E. To facilitate installation and disassembly, sprockets shall be of the split type or shall be furnished with taper-lock bushings as required.

F. Idler sprockets shall be furnished with brass or Babbitt bushings, complete with oil hole and axial or circumferential grooving. Steel collars with set screws may be provided in both sides of the hub.

2.10 INSULATING CONNECTIONS

A. General: Insulating bushings, unions, couplings, or flanges, as appropriate, shall be used in accordance with the requirements of the Section 15000, "Piping, General."

2.11 GASKETS AND PACKINGS

A. Gaskets shall be in accordance with the requirements of Section 15000, "Piping, General."

B. Packing around valve stems and reciprocating shafts shall be of compressible material, compatible with the fluid being used. Chevron-type "V" packing shall be Garlock No. 432, John Crane "Everseal," or equal.

C. Packing around rotating shafts (other than valve stems) shall be "O"-rings or similar seals, or mechanical seals, as recommended by the manufacturer and accepted by the CITY.

2.12 NAMEPLATES

A. Equipment nameplates of stainless steel shall be engraved or stamped and fastened to the equipment in an accessible location with No. 4 or larger oval head stainless steel screws or drive pins. Nameplates shall contain the manufacturer's name, model, serial number, size, characteristics, and appropriate data describing the machine performance ratings.

2.13 SAFETY REQUIREMENTS

A. Where work areas are located within a flammable or toxic gas environment, suitable gas detection, ventilating, and oxygen deficiency equipment shall be provided. Workers shall be equipped with acceptable breathing apparatus.

2.14 OVERLOAD PROTECTION

A. General: Unless otherwise specified in individual equipment Sections, all major equipment drives shall be provided with mechanical or electrical overload protection device as specified in the following paragraphs.

B. Mechanical System: The overload protection shall be a mechanical device to provide for reliable protection in the event of excessive overload. It shall be a ball detent type designed for long term repeatability and life. It shall be infinitely adjustable by a single adjusting nut. Once set it shall be tamperproof, and incorporate a torque monitoring and control system. It shall activate an alarm set for 85 percent, and a motor cutout switch set for 100 percent of maximum continuous running torque. A visual torque indication shall be provided and oriented so that it may be read from the walkway. The dial shall be calibrated from 0 to 100 percent of maximum continuous running torque. The design of the torque limiter should initiate the mechanical disengagement of the drive upon overload. Each unit shall be suitable for outdoor/corrosive environments with a protective finish, corrosion inhibiting lubricants and a stainless steel cover.

C. Electronic System: As an alternative to the mechanical system, the overload protection may be an Electronic Torque Monitoring Control System capable of displaying torque, rpm's, one level of overload and two levels of overload of the drive system. It shall incorporate a time-delay for start-up and a voltage monitoring and compensation circuit for up to +/- 15 percent variation.

D. The overload device shall have an enclosure suitable for outdoor installation at temperatures of 0-70 degrees C, and relative humidity up to 100%, unless unit is in an air conditioned environment where 95 percent shall be acceptable. A visual torque dial shall be provided and oriented so that it can be easily read from the walkway.

E. The torque monitoring system shall be calibrated to: alarm and shut down the system in the event the torque drops to 50 percent of normal running; alarm at 85 percent of maximum continuous running torque and shut down the motor at maximum continuous running torque of the equipment. The system shall be calibrated at the factory of the

equipment manufacturer and it shall be capable of monitoring twice the maximum continuous running torque of the equipment.

F. Manufacturers, or Equal:

1. American Autogard Corporation

2. Ferguson Machine Company.

PART 3 – EXECUTION

3.01 INSTALLATION

A. General: All equipment shall be installed in accordance with acceptable procedures submitted with the shop drawings and as indicated on the Drawings, unless otherwise accepted by the CITY.

B. Alignment: Equipment shall be field tested to verify proper alignment, operation as specified, and freedom from binding, scraping, vibration, shaft run out, or other defects. Drive shafts shall be measured just prior to assembly to ensure correct alignment without forcing. Equipment shall be secure in position and neat in appearance.

C. Lubricants: The installation work shall include furnishing the necessary oil and grease for initial operation.

D. Couplings: The CONTRACTOR shall install the equipment in accordance with the equipment manufacturer's printed recommendations.

E. Insulating Connections: All insulating connections shall be installed in accordance with the manufacturer's printed recommendations.

F. Pipe Hangers, Supports and Guides: Hangers shall be spaced in accordance with ANSI/ASME B.31.I and with tables in Section 15000,"Piping, General."

3.02 PROTECTIVE COATING

A. All exposed materials, except corrosion-resistant metals which have not been shop painted shall be field coated as specified in Section 09850, "Painting." Shop painted items which suffered damage to the shop coating shall be touched up as specified in said "Painting" Section.

- - END OF SECTION - -

SECTION 11190 - PUMPS, GENERAL

PART 1 – GENERAL

1.01 THE REQUIREMENT

A. The CONTRACTOR shall provide all tools, supplies, materials, equipment and labor necessary for furnishing, installing, testing, and placing into operation of all pumps and pumping appurtenances, complete and operable, all in accordance with the requirements of the Contract Documents.

B. The provisions of this Section shall apply to all pumps and pumping equipment specified, except where otherwise specified in the Contract Documents.

1.02 RELATED WORK SPECIFIED ELSEWHERE

A. Metals.

B. Painting.

C. Equipment General Provisions.

D. Piping.

1.03 REFERENCE SPECIFICATIONS, CODES AND STANDARDS

A. Codes:

THE BUILDING CODE, AS REFERENCED HEREIN, SHALL BE THE FLORIDA BUILDING CODE (FBC), AS SPECIFIED IN SECTION ENTITLED "REFERENCE STANDARDS."

ANSI/NFPA 70	NATIONAL ELECTRIC CODE

B. Commercial Standards:

ANSI B1	CAST IRON PIPE FLANGES AND FLANGED FITTINGS, CLASS 25, 125, AND 250
ANSI B1	PIPE FLANGES AND FLANGED FITTINGS, STEEL NICKEL ALLOY AND OTHER SPECIAL ALLOYS
ANSI/ASME B3	POWER PIPING
ANSI/ASME B73.1M	SPECIFICATIONS FOR HORIZONTAL END SUCTION CENTRIFUGAL PUMPS FOR CHEMICAL PROCESS
ANSI/ASME B73.2M	SPECIFICATIONS FOR VERTICAL IN-LINE CENTRIFUGAL PUMPS FOR CHEMICAL PROCESS

ANSI/AWWA E101	DEEP WELL VERTICAL TURBINE PUMPS - LINE SHAFT AND SUBMERSIBLE TYPES
ANSI/IEEE 112	TEST PROCEDURE FOR POLYPHASE INDUCTION MOTORS AND GENERATORS
ANSI/IEEE 115	TEST PROCEDURE FOR SYNCHRONOUS MACHINES
ASTM A48	SPECIFICATION FOR GRAY IRON CASTINGS
ASTM A470	SPECIFICATION FOR VACUUM-TREATED CARBON AND ALLOY FORGINGS FOR TURBINE ROTORS AND SHAFTS
ASTM A536	SPECIFICATION FOR DUCTILE IRON CASTINGS
ASTM E448	STANDARD PRACTICE FOR SCLEROSCOPE HARDNESS TESTING OF METALLIC MATERIALS
ASTM B62	SPECIFICATION FOR COMPOSITION BRONZE OR OUNCE METAL CASTINGS
HYDRAULIC INSTITUTE	STANDARDS FOR CENTRIFUGAL, ROTARY, AND RECIPROCATING PUMPS

1.04 CONTRACTOR SUBMITTALS

A. Shop Drawings: Shop drawings of all pumps shall be submitted to the CITY. Shop drawings shall contain the following information:

1. Pump name, identification number and specification number.

2. Performance curve and pump data.

3. Pump hydraulic characteristic curves, efficiencies, required NPSH, and horsepower curves at pump rotative speeds corresponding to the conditions specified. For variable speed driven pumps, curves shall be submitted at minimum, intermediate and maximum operating speed as well as for operation with the variable speed drive bypassed (across the line). The CONTRACTOR shall require the manufacturer to indicate points on the H/Q curves, and the limits recommended for stable operation between which the pumps may be operated without surge, cavitation and vibration. The stable operating range shall be as wide as possible based on actual hydraulic and mechanical tests.

4. General cutaway sections, materials, dimension of shaft projections, shaft and keyway dimensions, shaft diameter, dimension between bearings, general dimensions of pump, suction head bolt orientation, design or baseplate, and anchor bolt locations and forces.

5. Electrical data including control and wiring diagrams.

6. Pump drive and motor data in accordance with Section entitled "Electric Motors".

7. Calculations for L-10 bearing life, shaft size, coupling size and anchor bolt size.

8. Uncrated weight of the pump, weight of heaviest part of pump.

9. Foundry certificates and results of Brinnell hardness testing showing compliance to ASTM A532. Each individual casting shall be Brinnell tested in a minimum of two places, in an area of representative casting thickness to ASTM Method E-10. Results shall be certified by a registered professional Engineer. Test results shall verify the satisfaction of the required Brinnell hardness of the finished product as specified in respective subsections.

10. Where pump and motor speeds are to be regulated by variable speed drives, the CONTRACTOR shall coordinate, furnish and exchange all necessary requirements with the respective equipment manufacturers to ensure compatibility and shall submit pump, motor and variable speed drive shop drawings together as a complete system.

B. Certification: The CONTRACTOR shall obtain written certification from the pump manufacturer, stating that the equipment will efficiently and thoroughly perform the required functions in accordance with these Specifications and as indicated on the Drawings, CONTRACTOR shall have unit responsibility for coordination of all equipment, including motors, variable speed drives, controls, and services required for proper installation and operation of the completely assembled and installed pumps. The CONTRACTOR shall submit all such certificates to the CITY.

C. O & M Manuals: Prior to start-up the CONTRACTOR shall furnish complete operations and maintenance manuals in accordance with the Section entitled "Submittals".

D. Spare Parts: The CONTRACTOR shall obtain from the pump manufacturer a list of suggested spare parts of all items of each pump, motor, and drive, subject to wear, such as seals, packing, gaskets, nuts, bolts, washers, wear rings, etc., as well as a set of spare bearings. He shall furnish all these parts suitably packaged and labeled in a box as described above for tools.

E. Maintenance: Printed instructions relating to proper maintenance, including lubrication, and parts lists indicating the various parts by name, number, and diagram where necessary, shall be furnished in duplicate with each unit or set of identical units in each pumping station. A recommended spare parts list shall be included.

F. Field Procedures: Instructions for field procedures for erection, adjustments, inspection, and testing shall be provided with the shop drawings.

1.05 QUALITY ASSURANCE

A. Performance Curves: All centrifugal pumps shall have a continuously rising curve. In no case shall the required horsepower at any point on the performance curve exceed the rated horsepower of the motor or engine.

B. Equipment Testing: The CONTRACTOR shall be responsible for the coordination of the following tests of each pump, drive, and motor. Pump tests shall utilize the actual motors

and pump-motor bases to be furnished with the pumping equipment. Use of the pump manufacturers standard test motors is not acceptable.

1. General: Tests shall be performed in accordance with the Standards of the Hydraulic Institute, Inc. Tests shall be performed on the actual assembled unit from shut-off head condition to 25 percent above the required design capacity. Prototype model tests will not be acceptable. Pump shop tests shall be made by the manufacturer and certified curves shall be submitted prior to witness tests. The shop tests shall consist of standard IEEE tests of motors, operation of the pumps and motors installed on the actual pump and motor bases to be furnished for proper balance of equipment and all other requirements as specified under this section. Pumps motors and drives shall be factory witness-tested, as defined herein. All electronic transducers, meters, gauges, and test instruments shall be calibrated within 30 days prior to the scheduled test and certified calibration data shall be provided. Differential pressure type flow meters, such as venture type are preferred and shall have been calibrated, and its accuracy certified within the past 12 months. In case of failure of any unit to meet the test requirements, the manufacturer shall make such alterations as are necessary, and the tests shall be repeated without additional cost to the CITY until the equipment test is passed.

2. Factory Tests of Motors: All motors of sizes 10 horsepower and larger, shall be assembled, tested, and certified at the factory and the working clearances checked to insure that all parts are properly fitted. The tests shall be in accordance with ANSI/IEEE 112 and ANSI/IEEE 115 standards, including heat run and efficiency tests. All computations shall be recorded and 12 certified and dated copies of the test results shall be furnished to the CITY.

3. Field Tests: All pumping units shall be field tested after installation, in accordance with the Contract Documents, to demonstrate satisfactory operation, without causing excessive noise, vibration, cavitation, and overheating of the bearings. The field testing shall be performed in the presence of an experienced field representative of the manufacturer of each major item of equipment, who shall supervise the following tasks and shall certify in writing that the equipment and controls have been properly installed, aligned, lubricated, adjusted, and readied for operation. The field testing shall be witnessed by the CITY or its representative. In the event any of the pumping equipment fails to meet the above test requirements, it shall be modified and retested in accordance with the requirements of these Specifications. The CONTRACTOR shall then certify in writing that the equipment has been satisfactorily tested, and that all final adjustments thereto have been made. Certification shall include date of final acceptance test, as well as a listing of all persons present during tests, and resulting test data. The costs of all work performed in this Paragraph by factory-trained representatives shall be borne by the CONTRACTOR.

4. Acceptance: In the event of failure of any pump to meet any of the above requirements or efficiencies, the CONTRACTOR shall make all necessary modifications, repairs, or replacements to conform to the requirements of the Contract Documents and the pump shall be re-tested at no additional compensation, until found satisfactory.

1.06 MANUFACTURER'S SERVICE REPRESENTATIVE

A. The services of the manufacturer's representative shall be provided for periods stated in the following schedule:

Schedule 11190-1 Manufacturer's Service Pump Station	
Installation	1
Start-Up	1

B. During the operation trip the CONTRACTOR, through the manufacturer, shall instruct CITY's personnel.

C. Any additional time required to achieve successful installation and operation shall be at the expense of the CONTRACTOR.

1.07 CLEANUP

A. After completion of the installation and testing, the CONTRACTOR shall remove all debris from the site, clean all the pumping equipment and controls, and hand over its work in perfect operating condition.

1.08 GUARANTEES, WARRANTIES

A. After completion, the CONTRACTOR shall furnish to the CITY the manufacturer's written guarantees that the pumping equipment will operate with the published efficiencies, heads, and flow ranges and meet these specifications. The CONTRACTOR shall also furnish the manufacturer's warranties as published in its literature and as specified.

PART 2 – PRODUCTS

2.01 GENERAL

A. Wherever it is specified that a single Supplier shall be responsible for the compatible and successful operation of the various components of any pumping equipment, it shall be understood to mean that the CONTRACTOR shall furnish and install only such pumping equipment as the designated single Supplier will certify is suitable for use with its equipment and with the further understanding that this in no way constitutes a waiver of any specified requirements.

B. All manufactured items provided under this Section shall be new, of current manufacture, and shall be the products of reputable manufacturers specializing in the manufacture of such products; such manufacturers shall have had previous experience in such manufacture and the CONTRACTOR shall, upon request of the CITY, furnish the names of not less than five (5) successful installations of the manufacturer's equipment of comparable nature to that offered under this contract.

C. All combinations of manufactured equipment which are provided under these Specifications shall be entirely compatible, and the CONTRACTOR shall be responsible

for the compatible and successful operation of the various components of the units conforming to specified requirements. Each unit of pumping equipment shall incorporate all basic mechanisms, coupling, electric motor or engine drive and unit mounting. All necessary mountings and appurtenances shall be included.

D. Where 2 or more units of the same type and/or size of pumping equipment are required, such units shall all be produced by the same manufacturer.

2.02 MATERIALS

A. All materials employed in the pumping equipment shall be suitable for the intended application; material not specifically called for shall be high-grade, standard commercial quality, free from all defects and imperfection that might affect the serviceability of the product for the purpose for which it is intended, and shall conform to the following requirements unless otherwise specified in individual pumping equipment specifications:

1. Cast iron pump casings and bowls shall be of close-grained gray cast iron, conforming to ASTM A48, or equal.

2. Bronze pump impellers shall conform to ASTM B584.

3. Stainless steel pump shafts shall be of Type 400, Series. Miscellaneous stainless steel parts shall be of Type 304 except in septic environment where they shall be Type 316.

4. All anchor bolts, nuts and washers shall be type 316 stainless steel, unless otherwise specified in individual pumping equipment specifications.

2.03 PUMP APPURTENANCES

A. Nameplates: Each pump shall be equipped with a stainless steel nameplate indicating rated head and flow, pump size and type, impeller size, pump speed, and manufacturer's name and model and serial number.

PART 3 – EXECUTION

3.01 INSTALLATION

A. General: Pumping equipment shall be installed in accordance with the manufacturer's recommendations, acceptable procedures submitted with the shop drawings and as indicated on the Drawings, unless otherwise accepted by the CITY.

B. Alignment: Equipment shall be field tested to verify proper alignment, operation as specified, and freedom from binding, scraping, vibration, shaft run out, or other defects. Pump drive shafts shall be measured just prior to assembly to ensure correct alignment without forcing. Equipment shall be secure in position and neat in appearance. Pumping equipment shall be installed and adjusted in such a manner that connecting piping does not impose any strain whatsoever on any pump. Pumps shall be set so that connecting flanges, screwed and flexible connections meet without strain or distortion.

C. Lubricants: The installation work shall include furnishing the necessary oil and grease for initial operation.

D. Connections: All motors shall be connected to the conduit system by means of a short section (18 inch minimum) of weatherproof flexible conduit, unless otherwise indicated. For connections for No. 6 AWG and smaller wire size, the CONTRACTOR shall furnish flexible conduit with an acceptable grounding conductor inside the flexible section. For connections of No. 4 AWG or larger wire size, the CONTRACTOR shall install a grounding conduction in the conduit and terminate at the motor control center with an acceptable grounding clamp.

3.02 PROTECTIVE COATING

A. All exposed materials, except corrosion-resistant metals which have not been shop painted, shall be field coated as specified in the Section entitled "Painting". Shop painted items which suffered damage to the shop coating shall be touched up as specified in Section entitled "Painting."

B. Gears, bearing surfaces, and other similar surfaces obviously not to be painted shall be given a heavy shop coat of grease or other suitable rust-resistant coating. This coating shall be maintained as necessary to prevent corrosion during periods of storage and erection and shall be satisfactory to the CITY up to the time of the final acceptance.

- - END OF SECTION - -

SECTION 11192 – SUBMERSIBLE NON-CLOG PUMPS

PART 1 – GENERAL

1.01 THE REQUIREMENT

A. The CONTRACTOR shall install all supplies, materials, equipment and labor necessary for the furnishing, installing, field testing, and placing into operation of the pumps and pumping appurtenances, complete and operable, all in accordance with the requirements of the Contract Documents.

1.02 RELATED WORK SPECIFIED ELSEWHERE

A. Equipment General Provisions.

B. Pumps, General.

C. Electrical General Provisions.

D. Motors.

E. Instrumentation.

PART 2 – PRODUCTS

2.01 SEWAGE PUMPS

A. General

1. The pumps, electric motors and couplings shall be the standard product of a manufacturer which has produced and sold such pumps, couplings and motors for a period of at least 5 years for similar service.

2. The pumping units shall be suitable for the design conditions stated herein and for the allotted space shown on the Plans.

3. The pump station shall have two (2) pumps that are totally submersible, electrically operated, capable of handling raw unscreened sewage. The design shall be such that the pump unit will be automatically and firmly connected to the discharge piping when lowered into place on its mating discharge connection which is permanently installed in the wet well. For this purpose there shall be no need for personnel to enter the wet well. The pump shall be so designed that it may be lowered to or raised from its place in the wet well by chain or cable and accurately guided by two pipe guide bars.

4. Each pump shall meet the operating requirements outlined below. The motor at the nameplate rating specified shall not overload anywhere along the entire characteristic curve of the impeller. The pump design shall be such that the impeller is attached directly to the motor shaft.

5. Vibration shall not exceed 0.2 inches per second, velocity as measured by the Standards of the Hydraulic Institute. Pump structure shall have a first natural frequency at least twice the shaft maximum rotative speed.

6. Each pump with its appurtenances and cable shall be capable of continuous submersion under water without loss of water-tight integrity. Major parts such as stator casing, oil casing, sliding bracket, volute and impeller shall be of cast iron. All surfaces coming into contact with sewage shall be protected by a coating resistant to sewage. All exposed bolts and nuts shall be Type 316 stainless steel.

7. The pumps shall be Flygt Model NP-3171 MT 3~ 433 or equal.

a.	No. of Units	2
b.	Model	NP-3171 MT 3~ 433
c.	Impeller, mm	266
d.	Motor Horsepower (1) (2) (non-overloading)	34
e.	Motor Speed, rpm	1,760
f.	Minimum Efficiency at Rated Point	
g.	One Pump Operation, gpm @ TDH, ft	1,480 @ 69
h.	Shut-off Head, ft	129
i.	Connection Diameters; in.	
	Suction	N/A
	Discharge	6
j.	Minimum solids passing; inch	3
k.	Fluid pumped	Raw Sewage

(1) Along entire characteristic curve of impeller.
(2) Pump Station wet well is classified as a Class 1 Division 1 Hazardous Location. Submersible motor shall be explosion proof

The above characteristics are for the impellers to be furnished and installed with the pumps. Available impellers for future use shall be at least 1-inch diameter large and smaller than necessary for the above conditions. Regular manufacturer's published data shall support the above.

B. Pump Design

1. The pump shall be totally submersible, non-clogging, centrifugal, designed specifically for use in municipal waste water applications, capable of handling raw unscreened sewage. There shall be no need for personnel to enter the wet-well. The pump shall automatically connect to the discharge elbow with a metal-to-metal

watertight contact. The pump shall be guided by no less than two (2) separate 316 stainless steel guide rails. Sealing of the discharge interface with a diaphragm, O-ring or profile gasket will not be acceptable. The pump shall not bear directly on the floor of the wet well.

C. Pump Construction

1. Major pump components shall be of grey cast iron, ASTM A-48, Class 35B, with smooth surfaces devoid of blow holes or other irregularities. The lifting handle shall be of stainless steel. All exposed nuts or bolts shall be of stainless steel construction. All metal surfaces coming into contact with the pumpage, other than stainless steel or brass, shall be protected by a factory applied spray coating of acrylic dispersion zinc phosphate primer with a polyester resin paint finish on the exterior of the pump.

   Sealing design shall incorporate metal-to-metal contact between machined surfaces. Critical mating surfaces where watertight sealing is required shall be machined and fitted with Nitrile rubber O-rings. Fittings will be the result of controlled compression of rubber O-rings in two planes and O-ring contact of four sides without the requirement of a specific torque limit.

   Rectangular cross sectioned gaskets requiring specific torque limits to achieve compression shall not be considered as adequate or equal. No secondary sealing compounds, elliptical O-rings, grease or other devices shall be used..

2. Each unit shall be provided with an integral motor cooling system. A stainless steel motor cooling jacket shall encircle the stator housing, providing for dissipation of motor heat regardless of the type of pump installation. An impeller, integral to the cooling system and driven by the pump shaft, shall provide the necessary circulation of the cooling liquid through the jacket. The cooling liquid shall pass about the stator housing in the closed loop system in turbulent flow providing for superior heat transfer. The cooling system shall have one fill port and one drain port integral to the cooling jacket. The cooling system shall provide for continuous pump operation in liquid or ambient temperatures of up to 104°F (40°C.). Operational restrictions at temperatures below 104°F are not acceptable. Fans, blowers or auxiliary cooling systems that are mounted external to the pump motor are not acceptable.

3. The cable entry seal design shall preclude specific torque requirements to insure a watertight and submersible seal. The cable entry shall consist of dual cylindrical elastomer grommets, flanked by washers, all having a close tolerance fit against the cable outside diameter and the entry inside diameter. The grommets shall be compressed by the cable entry unit, thus providing a strain relief function. The assembly shall provide ease of changing the cable when necessary using the same entry seal. The cable entry junction chamber and motor shall be sealed from each other, which shall isolate the stator housing from foreign material gaining access through the pump top. Epoxies, silicones, or other secondary sealing systems shall not be considered equal.

D. Motor

1. The pump motor shall be a NEMA B design, induction type with a squirrel cage rotor, shell type design, housed in an air filled, watertight chamber. The stator windings shall be insulated with moisture resistant Class H insulation rated for 180°C (356°F). The

stator shall be insulated by the trickle impregnation method using Class H monomer-free polyester resin resulting in a winding fill factor of at least 95%. The motor shall be inverter duty rated in accordance with NEMA MG1, Part 31.The stator shall be heat-shrink fitted into the cast iron stator housing. The use of multiple step dip and bake-type stator insulation process is not acceptable. The use of pins, bolts, screws or other fastening devices used to locate or hold the stator and that penetrate the stator housing are not acceptable. The motor shall be designed for continuous duty while handling pumped media of up to 104°F. The motor shall be capable of no less than 30 evenly spaced starts per hour. The rotor bars and short circuit rings shall be made of aluminum. Three thermal switches shall be embedded in the stator end coils, one per phase winding, to monitor the stator temperature. These thermal switches shall be used in conjunction with and supplemental to external motor overload protection and shall be connected to the motor control panel.

2. The junction chamber shall be sealed off from the stator housing and shall contain a terminal board for connection of power and pilot sensor cables using threaded compression type terminals. The use of wire nuts or crimp-type connectors is not acceptable. The motor and the pump shall be produced by the same manufacturer.

3. The motor service factor (combined effect of voltage, frequency and specific gravity) shall be 1.15. The motor shall have a voltage tolerance of +/- 10%. The motor shall be designed for continuous operation in up to a 40°C ambient and shall have a NEMA Class B maximum operating temperature rise of 80°C. A motor performance chart shall be provided upon request exhibiting curves for motor torque, current, power factor, input/output kW and efficiency. The chart shall also include data on motor starting and no-load characteristics.

   Motor horsepower shall be sufficient so that the pump is non-overloading throughout its entire performance curve, from shut-off to run-out. The motor and cable shall be capable of continuous submergence underwater without loss of watertight integrity to a depth of 65 feet or greater.

4. The power cable shall be sized according to the NEC and ICEA standards and shall be of sufficient length to reach the junction box without the need of any splices. The power cable shall be of a shielded design in which an overall tinned copper shield is included and each individual phase conductor is shielded with an aluminum coated foil wrap. The outer jacket of the cable shall be oil resistant chlorinated polyethylene rubber. The cable shall be capable of continuous submergence underwater without loss of watertight integrity to a depth of 65 feet or greater. This cable is required for use with Flygt SmartRunTM intelligent controls.

E. Bearings

1. The integral pump/motor shaft shall rotate on two bearings. The motor bearings shall be sealed and permanently grease lubricated with high temperature grease. The upper motor bearing shall be a two row angular contact ball bearing. The lower bearing shall be a two row angular contact ball bearing to handle the thrust and radial forces. The minimum L10 bearing life shall be 50,000 hours at any usable portion of the pump curve.

F. Mechanical Seals

1. Each pump shall be provided with a positively driven dual, tandem mechanical shaft seal system consisting of two seal sets, each having an independent spring. The lower primary seal, located between the pump and seal chamber, shall contain one stationary and one positively driven rotating corrosion and abrasion resistant tungsten-carbide ring. The upper secondary seal, located between the seal chamber and the seal inspection chamber shall be a leakage-free seal. The upper seal shall contain one stationary and one positively driven rotating corrosion and abrasion resistant tungsten-carbide seal ring. The rotating seal ring shall have small back-swept grooves laser inscribed upon its face to act as a pump as it rotates, returning any fluid that should enter the dry motor chamber back into the lubricant chamber. All seal rings shall be individual solid sintered rings. Each seal interface shall be held in place by its own spring system. The seals shall not depend upon direction of rotation for sealing. Mounting of the lower seal on the impeller hub is not acceptable. Shaft seals without positively driven rotating members or conventional double mechanical seals containing either a common single or double spring acting between the upper and lower seal faces are not acceptable. The seal springs shall be isolated from the pumped media to prevent materials from packing around them, limiting their performance.

2. Each pump shall be provided with a lubricant chamber for the shaft sealing system. The lubricant chamber shall be designed to prevent overfilling and shall provide capacity for lubricant expansion. The seal lubricant chamber shall have one drain and one inspection plug that are accessible from the exterior of the motor unit. The seal system shall not rely upon the pumped media for lubrication.

3. The area about the exterior of the lower mechanical seal in the cast iron housing shall have cast in an integral concentric spiral groove. This groove shall protect the seals by causing abrasive particulate entering the seal cavity to be forced out away from the seal due to centrifugal action.

4. A separate seal leakage chamber shall be provided so that any leakage that may occur past the upper, secondary mechanical seal will be captured prior to entry into the motor stator housing. Such seal leakage shall not contaminate the motor lower bearing. The leakage chamber shall be equipped with a float type switch that will signal if the chamber should reach 50% capacity.

5. Seal lubricant shall be non-hazardous.

G. Shaft

1. The pump and motor shaft shall be a single piece unit. The pump shaft is an extension of the motor shaft. Shafts using mechanical couplings shall not be acceptable. The shaft shall be stainless steel – ASTM A479 S43100-T. Shaft sleeves will not be acceptable.

H. Impeller

1. The impeller shall be of ASTM A-48, Class 35B grey iron, dynamically balanced, semi-open, multi-vane, back swept, screw-shaped, non-clog design. The impeller leading edges shall be mechanically self-cleaned automatically upon each rotation as they pass across a spiral groove located on the volute suction. The leading edges of the impeller shall be hardened to Rc 45 and shall be capable of handling solids, fibrous

materials, heavy sludge and other matter normally found in wastewater. The screw shape of the impeller inlet shall provide an inducing effect for the handling of up to 5% sludge and rag-laden wastewater. The impeller to volute clearance shall be readily adjustable by the means of a single trim screw. The impeller shall be locked to the shaft, held by an impeller bolt and shall be coated with alkyd resin primer.

I. Volute/Suction Cover

1. The pump volute shall be a single piece grey cast iron, ASTM A-48, Class 35B, non-concentric design with smooth passages of sufficient size to pass any solids that may enter the impeller. Minimum inlet and discharge size shall be as specified. The volute shall have a replaceable suction cover insert ring in which are cast spiral-shaped, sharp-edged groove(s). The spiral groove(s) shall provide trash release pathways and sharp edge(s) across which each impeller vane leading edge shall cross during rotation so to remain unobstructed. The insert ring shall be of ASTM A-48, Class 35B grey iron and provide effective sealing between the multi-vane semi-open impeller and the volute housing.

J. Protection

1. Each pump motor stator shall incorporate three thermal switches, one per stator phase winding and be connected in series, to monitor the temperature of the motor. Should the thermal switches open, the motor shall stop and activate an alarm. A float switch shall be installed in the seal leakage chamber and will activate if leakage into the chamber reaches 50% chamber capacity, signaling the need to schedule an inspection.

2. The thermal switches and float switch shall be connected to a Mini CAS control and status monitoring unit. The Mini CAS unit shall be designed to be mounted in the pump control panel.

PART 3 – EXECUTION

3.01 INSTALLATION

A. The CONTRACTOR shall install the pumps and appurtenances in accordance with the manufacturer's instructions and recommendations. The Vendor shall furnish the required oil and grease for initial operation. The grades of oil and grease shall be in accordance with the manufacturer's recommendations.

B. The CONTRACTOR shall install and adjust the pumps in such a manner that connecting piping will not impose any strain whatever on any pump. Pump shall be set upon level, fully grouted foundations so that connecting flanges, screwed connection, or flexible connections will meet without strain or distortion.

3.02 PAINTING

A. Before exposure to weather and prior to shop painting, all surfaces shall be thoroughly cleaned, dry and free from all mill/scale, rust, grease, dirt and other foreign matter.

B. Metal surfaces coming into contact with the pumpage, other than stainless steel or brass, shall be protected by a factory applied spray coating of acrylic dispersion zinc phosphate primer with a polyester resin paint finish on the exterior of the pump.

C. Gears, bearing surfaces and other similar surfaces obviously not to be painted, shall be given a heavy shop-coat of grease or other suitable rust-resisting coating. This coating shall be maintained as necessary to prevent corrosion during periods of storage and erection and shall be satisfactory to the Engineer up to the time of final acceptance test.

3.03 PUMP TESTS

A. The manufacturer shall perform the following inspections and tests on each pump before shipment from the factory:

1. Impeller, motor rating and electrical connections shall be checked for compliance with customer's purchase order.

2. Motor and cable insulation tests for moisture content or insulation defects shall be made.

3. Prior to submergence, the pump shall be run dry, to establish correct rotation and mechanical integrity.

4. Pump shall be run for 30 minutes submerged a minimum of 6 feet underwater.

5. After the operation tests, the insulation test is to be performed again. A written report, signed by a professional ENGINEER, registered in the state where the tests were performed, stating the foregoing steps have been satisfactorily accomplished, shall be supplied with each pump at the time of shipment.

3.04 SPARE PARTS

A. The CONTRACTOR shall obtain from the pump manufacturer a list of suggested spare parts of all items of each pump, motor, and drive, subject to wear, such as seals, packing, gaskets, nuts, bolts, washers, wear rings, etc., as well as a set of spare bearings. He shall furnish all these parts suitably packaged and labeled in a box as described above for tools.

3.05 GUARANTEE/WARRANTY

A. The Contractor shall guarantee that all new equipment has the capacity specified and that it will operate without excess noise or vibration.

1. **All factory warranties shall have an effective date of one year from the date of substantial completion of the work, or when equipment is placed into service for beneficial use, whichever comes first.** Copies of factory warranties for all equipment furnished shall be submitted as described above, with the written guarantee, and shall be included in operation and maintenance manuals.

- - END OF SECTION - -

SECTION 13252 - ODOR CONTROL SYSTEM

PART 1 – GENERAL

1.01 THE REQUIREMENT

A. The Contractor shall provide all labor, materials, equipment and supervision required to install/refurbish and place into satisfactory operation the existing odor control system as shown on the Contract Drawings and as specified herein. This includes removal and off site disposal of existing system media and redundant equipment.

B. The existing odor control system is a pre-engineered, modular Biofiltration System, Model PP-150 as manufactured by Biorem, Inc. in Victor, NY.

C. The materials covered by this specification are intended to be standard materials of proven performance from reputable manufacturers.

D. The CONTRACTOR shall be responsible for coordinating all equipment, materials and services required under this Contract for proper installation and operation of the refurbished odor control system. Coordination will be required during demolition, construction, start up and testing.

1.02 RELATED WORK SPECIFIED ELSEWHERE

A. Section 01300 – Submittals

B. Section 01600 – Materials and Equipment

C. Section 11000 – Equipment General Provisions

1.03 SUBMITTALS

A. Shop drawings shall be submitted in accordance with Section 01300.

1.04 MANUFACTURER'S SERVICE REPRESENTATIVE

A. The services of a qualified technical representative who shall adequately supervise the installation and testing of media, materials and equipment furnished under this Contract. The services of the manufacturer's representative shall be provided for a period of not less than two trips for a total time period of three (3) days.

B. The times specified are exclusive of travel time to and from the facility and shall not be construed as to relieve the manufacturer of any additional visits to provide sufficient service to place the equipment in satisfactory operation.

1.05 MATERIAL DELIVERY, STORAGE AND PROTECTION

A. Odor control system equipment and media shall not be shipped until the submittal is approved by the ENGINEER.

B. The proper storage of all materials shall be the responsibility of the CONTRACTOR. The CITY assumes no responsibility for materials which are not properly protected from the weather by the CONTRACTOR.

PART 2 – MATERIALS

2.01 GENERAL

A. **The CONTRACTOR shall furnish and install the replacement components for the existing odor control system as specified in this section**.

2.02 MEDIA KIT

A. CONTRACTOR shall furnish and install one media kit suitable for replacing existing media in the odor control system.

B. Media shall be organic compost based material containing indigenous microorganisms and split into layers to avoid compaction. Inorganic media requiring inoculation shall not be accepted.

C. Media kit shall contain sufficient media to replace the contents of each existing tray containing spent media. Minimum media volume per tray is 20 cubic feet. The PP-150 contains five media trays.

D. CONTRACTOR shall remove and dispose of existing spent media in accordance with all local, state and federal regulations.

2.03 CENTRIFUGAL BLOWER

A. The centrifugal blower shall be of a pressure blower design with an aluminum housing, aluminum base and an aluminum impeller.

B. Wheels shall be dynamically balanced before assembly. The vibration of the assembled blower and drive shall be checked prior to shipment to assure that it does not exceed 1.5 mils RMS displacement at full speed and design load.

C. The drive shall be a chemical duty, premium efficient, totally enclosed fan cooled (TEFC), AC, 480 volt, 3 phase, 60 Hz, electric motor suitable for outdoor installation. The motor shall be manufactured by Baldor, Reliance, Seimans, or equal.

D. The fan shall be designed to meet the following criteria:

1. Capacity at design conditions (ACFM): 150

2. Static suction pressure (in. of water): 10 @ 90 degrees F at 0.069 lbs/ft3 density

3. Maximum inlet temperature (degrees F): 200

4. Blower speed, maximum (RPM): 3500

5. Motor size, minimum (HP): 3

6. Inlet flange size (inches): 1.5

7. Outlet flange size (inches): 1.5

2.04 ODOR CONTROL SYSTEM ACCESSORIES

A. CONTRACTOR shall furnish and install six (6) duct sleeve connectors suitable for the existing odor control system.

B. CONTRACTOR shall furnish and install two (2) float valves suitable for use in the existing odor control system.

C. CONTRACTOR shall furnish and install two (2) sight gauges suitable for use in the existing odor control system.

D. CONTRACTOR shall furnish and install one (1) temperature gauge suitable for use in the existing odor control system.

2.05 SOUND ENCLOSURE

A. Provide an acoustical enclosure for fan motor unit suitable for outdoor installation. The enclosure shall be complete with FRP housing, gaskets, fasteners, flashing or any additional components required for installation.

B. All panels and components shall be prefabricated and shall not be susceptible to damage from extended exposure to airflow, pressure differentials, vibration, air temperature, or humidity.

C. Sound enclosure shall be designed to allow ease of removal for maintenance.

D. Enclosure size shall be determined by the manufacturer to suit the fan actually furnished.

E. Construction

1. Sound enclosure shall include top and bottom located vents.

2. Sound enclosure shall contain a layer of acoustical foam. This foam shall be an open cell, flexible polyester based acoustical grade, polyurethane foam designed to give maximum sound absorption per given thickness. It must provide excellent resistance to heat, moisture and chemicals as required for this application. Mineral wool, or any material which will degrade under high humidity conditions is not acceptable. Foam used must be specifically designed for use in sound deadening applications.

3. Support Members and Trim: All perimeter and internal channel members and trim items shall be composed of either corrosion resistant fiberglass reinforced plastic or stainless steel. Any other form of mild steel is not acceptable.

4. Furnish all anchor bolts nuts, and washers composed of Type 316 stainless steel. The enclosure unit shall be bolted directly to the top of the carbon vessel.

PART 3 – INSTALLATION

3.01 INSTALLATION

A. Replacement components for the odor control system shall be installed in accordance with the Contract Documents and the instructions of the manufacturer.

- - END OF SECTION - -

SECTION 15000 - PIPING, GENERAL

PART 1 – GENERAL

1.01 WORK INCLUDED

A. This Section consists of furnishing and installing all piping systems shown and specified as shown in the Drawings and/or as specified herein. Each system shall be complete with all necessary fittings, hangers, supports, anchors, expansion joints, flexible connectors, valves, accessories, lining and coating, testing, disinfection, excavation, and backfill, to provide a functional installation.

1.02 RELATED WORK SPECIFIED ELSEWHERE

A. Metals

B. Painting

1.03 REFERENCE SPECIFICATIONS, CODES AND STANDARDS

A. Commercial Standards:

ANSI B1	CAST IRON PIPE FLANGES AND FLANGED FITTINGS, CLASS 125.
ANSI B1	PIPE FLANGES AND FLANGED FITTINGS
ANSI/AWS D	STRUCTURAL WELDING CODE
ASTM A307	SPECIFICATION FOR CARBON STEEL BOLTS AND STUDS, 6000 PSI TENSILE STRENGTH
ASTM A325	SPECIFICATION FOR STRUCTURAL BOLTS, STEEL, HEAT TREATED, 120/105 KSI MINIMUM TENSILE STRENGTH
ASTM D792	TEST METHODS FOR DENSITY AND SPECIFIC GRAVITY (RELATIVE DENSITY) OF PLASTICS BY DISPLACEMENT

B. Certifications: Prior to installation, the CONTRACTOR shall furnish an Affidavit of Compliance certified by the pipe manufacturer that the pipe, fittings and specials furnished under this Contract comply with all applicable provisions of AWWA and these specifications.

C. All expenses incurred in making samples for certification of tests shall be borne by the CONTRACTOR.

1.04 QUALITY ASSURANCE

A. Tests: Except where otherwise specified, all materials used in the manufacture of the pipe shall be tested in accordance with the applicable Specifications and Standards.

B. Welding Requirements: All welding procedures used to fabricate pipe shall be prequalified under the provisions of ANSI/AWS D1.1. Welding procedures shall be required for, but not necessarily limited to, longitudinal and girth or spiral welds for pipe cylinders, spigot and bell ring attachments, reinforcing plates and ring flange welds, and plates for lug connections.

C. Welder Qualifications: All welding shall be done by skilled welders, welding operators, and tackers who have had adequate experience in the methods and materials to be used. Welders shall be qualified under the provisions of ANSI/AWS D1.1 by an independent local, acceptable testing agency not more than 12 months prior to commencing work. Machines and electrodes similar to those used in the Work shall be used in qualification tests. The CONTRACTOR shall furnish all material and bear the expense of qualifying welders

1.05 MANUFACTURER'S SERVICE REPRESENTATIVE

A. Where the assistance of a manufacturer's service representative is advisable, in order to obtain correct pipe joints, supports, or special connections, the CONTRACTOR shall furnish such assistance at no additional cost to the CITY.

1.06 MATERIAL DELIVERY, STORAGE, AND PROTECTION

A. All piping materials, fittings, valves, and accessories shall be delivered in a clean and undamaged condition and stored off the ground, to provide protection against oxidation caused by ground contact. All defective or damaged materials shall be replaced with new materials.

1.07 CLEANUP

A. After completion of the work, all remaining pipe cuttings, joining and wrapping materials, and other scattered debris, shall be removed from the site. The entire piping system shall be handed over in a clean and functional condition.

PART 2 – PRODUCTS

2.01 GENERAL

A. All pipes, fittings, and appurtenances shall be installed in accordance with the requirements of the applicable Sections and furnished as specified herein.

B. Pipe Supports: All pipes shall be adequately supported as shown in the Drawings.

C. Lining: All requirements pertaining to thickness, application, and curing of pipe lining, shall be in accordance with the requirements of the applicable Sections of Division 15, unless otherwise specified.

D. Coating: All requirements pertaining to thickness, application, and curing of pipe coating, is in accordance with the requirements of the applicable Sections of Division 15, unless otherwise specified. Pipes above ground or in structures shall be field painted in accordance with the Section entitled "Painting."

E. Pressure Rating: All piping systems shall be designed for the maximum expected pressure.

2.02 PIPE FLANGES

A. Flanges: Where the design pressure is 125 psi or less, flanges shall conform to either ANSI/AWWA C115/A21.15 Class D or ANSI B16.1 125 lb class. Where the design pressure is greater than 150 psi, up to a maximum of 250 psi, flanges shall conform to either ANSI/AWWA C115/21.15 or ANSI B16.1 250 lb class. Flanges shall have flat faces and shall be attached with bolt holes straddling the vertical axis of the pipe unless otherwise shown. Attachment of the flanges to the pipe shall conform to the applicable requirements of ANSI/AWWA 115/21.15. Flanges for miscellaneous small pipes shall be in accordance with the standards specified for these pipes.

B. Blind Flanges: Blind flanges shall be in accordance with ANSI/AWWA C207, or with the standards for miscellaneous small pipes. All blind flanges for pipe sizes 12 inches and over shall be provided with lifting eyes in the form of welded or threaded eye bolts.

C. Flange Coating: All machined faces of metal blind flanges and pipe flanges shall be coated with a temporary rust inhibitive coating to protect the metal until the installation is completed.

D. Flange Bolts: If studs are required, they shall be in accordance with ASTM A 307, Grade B, with heavy hex nuts. Machine bolts shall normally be used on all flanged connections and shall be in accordance with ASTM A 307, Grade A, with hex nuts. If studs are required, they shall extend through the nuts a minimum of 1/4 inch. All bolts and nuts shall be Type 316 stainless steel.

E. Flange Gaskets: Gaskets for flanged joints shall be of materials as specified in piping sections. Blind flanges shall have gaskets covering the entire inside face of the blind flange and shall be cemented to the blind flange. Ring gaskets shall not be permitted.

F. Flange Gasket Suppliers, or equal:

1. John Crane

2. Garlock

2.03 MECHANICAL TYPE COUPLINGS (BANDED PIPE)

A. General: Mechanical type couplings shall be provided where shown. Buried or submerged couplings shall have Type 316 stainless steel bolts and nuts.

B. Suppliers for Steel Pipe Couplings, or equal:

1. Victaulic Style 41 or 44 (banded). Note: Steel pipe couplings shall be furnished with grade E rubber gaskets.

C. Suppliers for Ductile Iron Pipe Couplings, or equal:

1. Victaulic Style 31.
   Note: Ductile iron pipe couplings shall be furnished with grade M flush seal gaskets.

D. Suppliers for PVC Pipe Couplings, or equal:

1. Victaulic Style 75.
   Note: PVC pipe couplings shall be furnished with grade E gaskets and radius cut or standard roll grooved pipe ends.

2.04 SLEEVE TYPE COUPLINGS

A. Construction: Sleeve type couplings shall be provided where shown, and shall be of similar material as the pipe, without pipe stop, and shall be of sizes to fit the pipe and fittings shown. The middle ring shall be not less than 1/4 inch in thickness and shall be either 5 or 7 inches long for standard steel couplings, and 16 inches long for long sleeve couplings. The followers shall be single piece contoured mill section welded and cold expanded as required for the middle rings. They shall be of sufficient strength to accommodate the number of bolts necessary to obtain adequate gasket pressures without excessive rolling. The shape of the follower shall be of such design as to provide positive confinement of the gasket. Bolts and nuts shall be Type 316 stainless steel.

B. Pipe Preparation: The ends of the pipe, where specified or shown, shall be prepared for sleeve type couplings. Plain ends for use with couplings shall be smooth and round for a distance of 12 inches from the ends of the pipe, with outside diameter not more than 1/64 inch smaller than the nominal outside diameter of the pipe. The middle ring shall be tested by cold expanding a minimum of one percent beyond the yield point, to proof test the weld to the strength of the parent metal. The weld of the middle ring shall be subjected to an air test for porosity.

C. Gaskets: Gaskets for sleeve type couplings shall be rubber compound material that will not deteriorate from age or exposure to air under normal storage or use conditions. The rubber in the gasket shall meet the following specifications:

   1. Color Jet Black.

   2. Surface – Non-blooming.

   3. Durometer Hardness - 74 + 5.

   4. Tensile Strength 1000 psi Minimum.

   5. Elongation 175 percent Minimum.

D. The gaskets shall be immune to attack by the material which is being transported. All gaskets shall meet the requirements of ASTM D 2000, AA709Z, meeting Suffix B13 Grade 3, except as noted above.

E. Insulating Couplings: Where insulating couplings are required, both ends of the coupling shall have a wedge-shaped gasket which assembles over a rubber sleeve of an insulating compound in order to obtain insulation of all coupling metal parts from the pipe.

F. Restrained Joints: Where harnesses are required for sleeve type couplings, they shall be in accordance with the requirements of the appropriate reference standard, or as shown.

G. Supplier, or equal:

   1. Rockwell (Smith-Blair), Style 411.

2. Dresser, Style 38.

3. Ford Meter Box Co., Inc., Style FC1 or FC3.

4. EBAA IRON, Inc., MEGALUG

2.05 REINFORCED FLEXIBLE PIPE COUPLING

A. Reinforced flexible piping couplings shall be as manufactured by Mercer Rubber Company, General Rubber Co., Metraflex, Proco Products, Inc., or equal.

B. The coupling shall be rated for a working pressure of 150 psig and shall be constructed of Kevlar reinforcing and natural rubber elastomer rated for a maximum temperature of 180o F. A Hypalon coating shall be applied to the exterior of the elastomer.

C. All couplings shall have integrally molded flanges with split and beveled galvanized steel retaining rings. Galvanized steel washers shall be provided at the point where the rings are split. Bolt holes and bolt circle patterns shall conform to the mating flange patterns as specified in the piping paragraphs. Coupling lengths shall be manufacturer's standard, subject to CITY's review and acceptance.

D. Control units shall be Type 316 stainless steel and shall be provided and installed with all flexible pipe couplings. The control unit shall be supplied by the coupling manufacturer.

2.06 PIPE INSULATION

A. Hot and cold liquid piping, flues and engine exhaust piping shall be insulated. No unprotected hot piping shall be within reach of operating personnel or others.

PART 3 – EXECUTION

3.01 GENERAL

A. The CONTRACTOR shall furnish all labor, tools, materials, and equipment necessary for installation and jointing of the pipe. All piping shall be installed in accordance with the Drawings in a neat workmanlike manner and shall be set for accurate line and elevation. All piping shall be thoroughly cleaned before installation, and care shall be taken to keep the piping clean throughout the installation.

B. Before setting wall sleeves, pipes, castings and pipes to be cast in place, the CONTRACTOR shall check the Drawings and equipment manufacturer's drawings which may have a direct bearing on the pipe locations. The CONTRACTOR shall be responsible for the proper location of the pipes and appurtenances during the construction of the project.

C. Piping shall be attached to pumps, valves, equipment, etc., in accordance with the respective manufacturers' recommendations. This includes the use of flexible connectors as required.

D. For piping assembled with threaded, solvent cemented, welded or soldered joints, liberal use of unions shall be made. Unions shall be provided close to main pieces of equipment and in branch lines to permit ready dismantling of piping without disturbing main pipe lines or

adjacent branch lines. A minimum of one union per straight run of pipe between fitting and/or valves with multiple lengths of pipe shall be used.

E. All changes in directions or elevations shall be made with fittings, unless otherwise shown.

3.02 SHIPPING, HANDLING AND STORAGE

A. Special care in handling shall be exercised during delivery, distribution and storage of pipe to avoid damage and setting up stresses. Damaged pipe will be rejected and shall be replaced at the CONTRACTOR's expense. Pipe and specials stored prior to use shall be stored in such a manner as to keep the interior free from dirt and foreign matter.

B. No pipe shall be dropped from cars or trucks to the ground. All pipe shall be carefully lowered to the ground by mechanical means. In shipping, pipe and fittings shall be blocked in such manner as to prevent damage to castings or lining. Any broken or chipped lining shall be carefully patched. Where it is impossible to repair broken or damaged lining in pipe because of its size, the pipe shall be rejected as unfit for use.

C. All mechanical joint pipe shall be laid with 1/8 inch space between the spigot and shoulder of pocket.

3.03 LAYING PIPE

A. Proper and suitable tools and appliances for the safe convenient handling and laying of pipe shall be used and shall, in general, agree with manufacturer's recommendations. At the time of laying, the pipe shall be examined carefully for defects, and should any pipe be discovered to be defective after being laid, it shall be removed and replaced with sound pipe by the CONTRACTOR at his expense.

B. Upon satisfactory excavation of the pipe trench and completion of the pipe bedding, a continuous trough for the pipe barrel and recesses for the pipe bells, or couplings, shall be excavated by hand digging. When the pipe is laid in the prepared trench, true to line and grade, the pipe barrel shall receive continuous, uniform support and no pressure shall be exerted on the pipe joints from the trench bottom.

C. Pipe shall be installed in accordance with the manufacturer's recommendation. Before being lowered into the trench, the pipes and accessories shall be carefully examined and the interior of the pipes shall be thoroughly cleaned of all foreign matter and other acceptable methods. At the close of each work day and during suspension of work for any reason at any time, a suitable stopper shall be placed in the end of the pipe last laid to prevent mud or other foreign material from entering the pipe.

D. Lines shall be laid straight and depth of cover shall be maintained uniform with respect to finish grade, whether grading is completed or proposed at time of pipe installation. Where a grade or slope is shown on the Drawings, the CONTRACTOR shall use laser based surveying instruments to maintain alignment and grade. At least one elevation shot shall be taken on each length of pipe and recorded. No abrupt changes in direction or grade will be allowed.

E. All underground piping shall be properly blocked at all fittings where the pipeline changes direction, changes size, or ends, using concrete thrust blocks as shown on the Drawings. As a minimum, concrete thrust blocks shall be sized so as to give bearing against undisturbed

earth sufficient to absorb the thrust from line pressure, allowing an earth bearing of 200 pounds per square foot per foot of depth below finish grade to a maximum of 2,000 pounds per square foot. (Earth bearing values may be increased, if clearly substantiated by a soils analysis.) The line pressure shall be the product of the nominal cross sectional area of the pipe and the maximum internal pressure anticipated for each type of pipe. The concrete shall be placed, unless shown otherwise on the Drawings so that the pipe joints and fittings will be acceptable. All underground restrained unrestrained joint piping and fittings shall be provided with concrete thrust blocks unless otherwise accepted by the CITY. Whenever new tees or elbows are connected to existing pipelines, a concrete thrust block shall be installed, subject to CITY's acceptance.

3.04 FLANGED JOINTS

A. Flanged joints shall be made up with full face gaskets as specified in the piping paragraphs. Flange faces shall have a uniform bearing on the gaskets. Flanges shall be drawn together uniformly until the joint is tight. No washers shall be permitted for the bolt and nut assemblies. The length of the bolts shall be uniform and in accordance with the standards specified herein. The bolt's maximum projection beyond the end of the nut shall be 0.25 inch nor shall the bolt fall short of the end of the nut.

3.05 WELDED JOINTS

A. Welded joints shall be shop fabricated in accordance with the standards and specifications contained herein.

B. Field welding will be permitted for black carbon steel pipe where it can be demonstrated that the interior of the pipe can be satisfactorily lined and inspected. Welding in the field shall be performed only when requested on the shop drawings and accepted by the CITY in writing as specified herein.

C. All welding shall be performed in accordance with ANSI B31.1 and AWWA C206 except as modified or supplemented herein. All welders shall be AWS certified in accordance with AWWA C206, and ANSI B31 requirements.

D. Pipe and fittings with wall thicknesses of 3/16-inch and larger shall have ends beveled for welding. Bevels shall be 30E with a maximum of 37-1/2E. The abutting pipe ends shall be separated before welding to permit complete fusion to the inside wall of the pipe without overlapping. Welding shall be continuous around the joint and shall be completed without interruption. Welds shall be of the single vee butt type, of sound weld metal thoroughly fused into the ends of the pipe and into the bottom of the vee. Welds shall be free from cold spots, pin-holes, oxide inclusions, burrs, snags, rough projections or other defects.

E. Filler metal for welding shall be of the same composition as the base metal. All welding of steel pipe flanges shall be in accordance with requirements of AWWA C207 and ANSI B31.1.

F. Field repairs of cement mortar lining and welded joints shall be made in accordance with AWWA C205 Appendix A or AWWA C602.

G. Field welds shall be "fixed position" type.

3.06 THREADED JOINTS

A. All threads shall be clean, machine cut and all pie shall be reamed before erection. Taps and dies shall be cleaned, sharpened and in good condition. All threaded joints shall be made tight with Teflon tape.

B. After having been set up, a joint shall not be backed off unless the joint is broken, the threads cleaned, and new tape is applied.

3.07 SOLVENT CEMENTED JOINTS

A. Joints shall be made up in accordance with ASTM D 2855 and the manufacturers' recommendations. The CONTRACTOR is advised to handle the solvent cements in accordance with ASTM F 402.

3.08 THRUST RESTRAINT

A. Pipe anchors shall be spaced to divide pipe into sections. Anchors shall be located at valves, changes in direction of piping, and major branch connections. Anchors shall be of a type recommended by the pipe manufacturer and accepted by the CITY.

B. On all piping, where sleeve type couplings and flanged adapters are located near fittings or valves, tie rods shall span across the coupling as specified herein to restrain movements of the pipe along its axial direction. Such restraints can be deleted if both ends of the pipe are anchored in a concrete structure with no fitting or valve occurring within the span length, in the suction piping to a pump where the coupling is between the pump and valve, or when the water pressure measured at the crown of the pipe is less than five feet.

C. All sleeve type couplings shall be harnessed except where noted specifically on the Drawings. The harnessing shall be as shown on the Drawings or as specified herein.

D. Where the distance between adjacent flanges is in excess of ten feet or where a harness cannot be used, the pipe supports adjacent to the coupling shall restrain the piping preventing any linear or angular movement resulting in the pipe separating from the coupling or misalignment in the joint.

E. Where expansion joints are used, control units shall be provided. All tie rods and control units shall be installed in accordance with the manufacturer's recommended procedures.

F. All buried tie rods and associated hardware shall be 316 stainless steel.

G. In general, all valves and fittings shall be restrained in an acceptable manner such that the unbalanced force developed at them shall be supported independent of the piping system.

3.09 PIPING SCHEDULE

A. This Section includes a schedule of piping specified in other Sections of Division 15.

Schedule 15000-1

Piping

Service	Nominal Pipe Diameter (Inches)	Material	Wall Thickness	Working Pressure (PSIG)	Type of Joints *	Type of Fittings	Protective Coating	
							Interior	Exterior
Discharge Piping								
Exposed	≤ 12	DI	CL 53	150	Flg	DI	EL	P
Buried	≤ 12	DI	CL 52	150	RJ	DI	EL	AC

Legend:

DI Ductile Iron
PVC Polyvinyl Chloride
Sch. Schedule
Flg Flanged
RJ Restrained Joint
PO Push On
Thd Threaded
SW Solvent Welded
EL Epoxy Lined
P Painted
AC Asphalt Coated

- - END OF SECTION - -

SECTION 15006 - DUCTILE IRON PIPE

PART 1 – GENERAL

1.01 THE REQUIREMENT

A. This Section consists of furnishing and installing ductile iron pipe and all appurtenant Work, complete in place, as shown in the Drawings and/or as specified herein.

1.02 RELATED WORK SPECIFIED ELSEWHERE

A. Piping, General

B. Painting

C. Pipeline Testing and Disinfection

D. Valves

1.03 REFERENCED SPECIFICATIONS, CODES, AND STANDARDS

A. Commercial Standards

ANSI/AWWA C110/A2	Ductile Iron and Gray Iron Fittings for Water
ANSI/AWWA C111/A2	Rubber Gasket Joints for Ductile Iron Pressure Pipe and Fittings
ANSI/AWWA C151/A2	Ductile Iron Pipe, Centrifugally Cast for Water
ANSI/AWWA C600	Installation of Ductile Iron Water Mains and their Appurtenances

PART 2 – PRODUCTS

2.01 GENERAL

A. Pipe shall be centrifugally cast in metal molds or sand lined molds in accordance with ANSI A21.51 (AWWA C151) of grade 60-42-10 ductile iron. The above standard covers ductile iron pipe with nominal pipe sizes from three inches up to and including sixty-four inches in diameter. Working pressure for the pipe shall be 150 psi or as otherwise identified in the pipe schedule.

B. Wall Thickness

1. The following design parameters shall be provided for all ductile iron piping in addition to the requirements contained in the pipe schedule. This wall thickness shall conform to the following classes of AWWA C150-91, as specified in Table 50.15, Special Thickness Classes of Ductile Iron Pipe for the following sizes unless noted otherwise in the schedule. Flanged pipe shall not be less than Class 53 as identified in Table 50.15 of AWWA C150-91.

PIPE MATERIAL	NOMINAL PIPE DIAMETER (INCHES)	CLASS	TYPE OF JOINT
DI	4 thru 12	52	RJ
DI	14 thru 54	51	RJ
DI	All	53	FLG

2. Buried mechanical and restrained joint pipe shall have a wall thickness class equal to or greater than the specified working pressure. Refer to pipe schedule for type of joint required for each type of service.

C. Joints

1. Ductile iron pipe above grade shall be flanged. All pipe below grade shall have restrained joints.

2. Mechanical joints shall be in accordance with ANSI A21.11 (AWWA C 111).

3. Flanges for flanged pipe shall be in accordance with ANSI A21.15 (AWWA C115), shall be ductile iron, shall be manufactured in the United States, shall be rated at 250 psi maximum working pressure, and shall be similar to flange Class 125 per ANSI B16.1. Where shown on the drawings, pipe and fittings shall be furnished with flanges similar to flange Class 250 per ANSI B16.1. Fittings shall be provided with flanges having a bolt circle and bolt pattern the same as the adjacent pipe and/or mechanical devices.

4. No raised face flanges shall be used. The raised faces shall be milled flat.

5. Flange gaskets shall be full face neoprene rubber.

6. Restrained joints for pipe to sixty-four inch nominal pipe size shall be FLEX-RING, LOK-RING, or LOK-FAST joints manufactured by American Cast Iron Pipe Co., TR-FLEX joints by U.S. Pipe and Foundry Company, or approved equal. Restrained joints on fittings shall be retainer gland mechanical joints, or the fittings may be specifically arranged for joining with restrained joint pipe.

7. Gasket material (push-on) mechanical joint, gasket restrained shall be neoprene.

8. Thrust restrained mechanical joints for ductile iron pipe and fittings shall utilize a restraining follower gland which, when actuated, imparts multiple wedging action against the pipe increasing its resistance as the pressure increases. Glands shall be manufactured of ductile iron conforming to ASTM A536. Restraining devices shall be of ductile iron heat treated to a minimum hardness of 370 BHN. Dimensions shall be such that the gland can be used with the standardized mechanical joint bell and tee head bolts. Twist off nuts, sized same as tee head bolts, shall be used to insure proper actuating of restraining devices. The mechanical joint shall have a working pressure of at least 250 psi with a minimum safety factor of 2:1 and shall be MEGALUG Series 1100 as manufactured by EBAA Iron, Inc., or equal.

9. Uni-Flange adapters shall be ductile iron ASTM 65-45-12. Uni-Flange adapters have drillings conforming to ANSI B16.1. Gasket supplied shall be neoprene suitable for wastewater transmission. Uni-Flange adapters shall be hydrostatic tested to 300 psi and shall be Uni-Flange adapter series 400 as manufactured by the Ford Meter Box Company, Inc., or equal.

D. Fittings

1. Shall be manufactured in accordance with ANSI A21.10 (AWWA C110) for nominal pipe sizes three inches to sixty-four inches, and shall be either flanged or mechanical joint. Any other fittings, not included in ANSI A21.10 (AWWA C110) shall conform in design and performance to the requirements of this Standard.

2. Shall have a rated pressure equal to or greater than the specified working pressure for nominal pipe sizes of three inches to sixty-four inches (350 psi fittings available through and including twenty-four inches, only).

3. Grey iron fittings which conform to the specifications contained herein may be used with ductile iron pipe providing the piping systems minimum working pressure is met or exceeded.

4. Blind, filler, companion and reducing flanges shall conform to ANSI B16.1.

E. Coatings and Linings for Pipe and Fittings

1. Where scheduled asphaltic coating shall be applied prior to shipment to the exterior wall of buried pipe and fittings in accordance with ANSI A21.51 (AWWA C151). A coating of rust inhibitive primer in conformance with Section 09850 "Painting" shall be applied prior to shipment to all exposed and interior piping.

2. Where scheduled all pipe and fittings shall be cement mortar lined to twice the standard thickness in accordance with ANSI A21.4 (AWWA C104) except as noted. A seal coat of asphaltic material shall be applied to the mortar lining. The seal coat material shall be in accordance with ANSI A21.4 (AWWA C104).

3. Where scheduled the interior of all ductile iron pipe and fittings shall be lined with an epoxy lining. The epoxy lining shall be Protecto 401 Ceramic Epoxy as manufactured by the Protecto Division of Vulcan Painters, Inc. All pipe and fittings shall be lined with a minimum dry film thickness of 40 mils, except for the gasket groove and spigot end up to six inches back from the end of the spigot which shall be lined with ten mils of the material. All ductile iron pipe and fittings shall be checked for dry film thickness in accordance with the SSPC-PA2. Each pipe joint and fitting shall be marked with the date of application of the lining system and with its numerical sequence of application on that date. The pipe supplier shall furnish a certificate stating that lining applicator has complied with all specification requirements relative to the material, its application and inspection. Surface preparation, number of coats, application of the lining material and field touch-up shall be in strict accordance with the lining material manufacturer's recommendations. During the installation of the pipe, the lining material manufacturer shall provide the services of a field Engineer to instruct and demonstrate to the CONTRACTOR's personnel the procedure for the field touch-up of lining where field cuts and taps were required. Holiday inspection shall be conducted using test equipment described in American Water Works Association Standard, AWWA C210, Section 5.3.3.1. In accordance with coating manufacturer's recommendation, holiday testing may be conducted any time after the coating has reached sufficient cure.

PART 3 – EXECUTION

3.01 INSTALLATION

A. Unless otherwise directed, ductile iron pipe shall be laid with the bell ends facing upstream in the normal direction of flow and in the direction of laying.

B. Thrust restrained and mechanical joints shall be made in accordance with the manufacturer's standards except as otherwise specified herein. Joints between mechanical joint pipe and/or fittings shall be made in accordance with ANSI/AWWA Standard C600, except that deflection at joints shall not exceed one half of the manufacturer's recommended allowable deflection, or one half of the allowable deflection specified in ANSI/AWWA C600, whichever is the lesser amount.

C. Before laying thrust restrained and mechanical joint pipe and fittings, all lumps, blisters and excess bituminous coating shall be removed from the bell and spigot ends. The outside of each spigot and the inside of each bell shall be wire brushed, and wiped clean and dry. The entire gasket groove area shall be free of bumps or any foreign matter which might displace the gasket. The cleaned spigot and gasket shall not be allowed to touch the trench walls or trench bottom at any time. Vegetable soap lubricant shall be applied in accordance with the pipe manufacturer's recommendations, to aid in making the joint. The workmen shall exercise caution to prevent damage to the gasket or the adherence of grease or particles of sand or dirt. Deflections shall only be made after the joint has been assembled.

D. Prior to making up flanged joints in ductile iron pipe and fittings, the back of each flange under the bolt heads and the face of each flange shall have all lumps, blisters and excess bituminous coating removed and shall be wire brushed and wiped clean and dry. Flange faces shall be kept clean and dry when making up the joint, and the workmen shall exercise caution to prevent damage to the gasket or the adherence of grease or particles of sand or dirt. Bolts and nuts shall be tightened by opposites in order to keep flange faces square with each other, and to insure that bolt stresses are evenly distributed.

E. Bolts and nuts in thrust restrained, mechanical and flanged joints shall be tightened in accordance with the recommendations of the pipe manufacturer for a leak free joint. The mechanics shall exercise caution to prevent overstress. Torque wrenches shall be used until, in the opinion of the CITY, the mechanics have become accustomed to the proper amount of pressure to apply on standard wrenches.

F. Cutting of the ductile iron pipe for inserting valves, fittings, etc., shall be done by the CONTRACTOR in a neat and workmanlike manner without damage to the pipe, the lining, or the coating. Pipe 16 inches and larger in diameter shall be cut with a mechanical pipe saw. After cutting the pipe, the plain end shall be beveled with a heavy file or grinder to remove all sharp edges.

G. Areas of loose or damaged lining associated with field cutting shall be repaired or replaced as recommended by the pipe manufacturer and required by the CITY. Repair methods shall be as recommended by the manufacturer and shall be submitted to the CITY for review.

H. Any work within the pipe shall be performed with care to prevent damage to the lining. No cable, lifting arms or other devices shall be inserted into the pipe. All lifting, pulling or pushing mechanisms shall be applied to the exterior of the pipe barrel.

I. Homing the pipe shall be accomplished by the use of a hydraulic or mechanical pulling device, unless otherwise accepted by the CITY. No pipe shall be driven or struck in order to seat it home.

J. Cleaning methods shall be acceptable to the CITY, and must be sufficient to remove silt, rocks, or other debris which may have entered the pipeline during its installation and shall also follow the requirements of Section entitled "Pipeline Testing".

- - END OF SECTION - -

SECTION 15020 - PIPE SUPPORTS

PART 1 – GENERAL

1.01 THE REQUIREMENT

A. The CONTRACTOR shall provide all tools, supplies, materials, equipment, and all labor necessary for the furnishing, construction, and installation of all pipe supports, hangers, guides, and anchors shown, specified, or required for a complete and operable piping system, in accordance with the requirements of the Contract Documents.

1.02 RELATED WORK SPECIFIED ELSEWHERE

A. Piping.

1.03 REFERENCE SPECIFICATIONS, CODES, AND STANDARDS

A. Commercial Standards:

ANSI/ASME B3	POWER PIPING.
ASTM A123	SPECIFICATIONS FOR ZINC (HOT-GALVANIZED) COATINGS ON PRODUCTS FABRICATED FROM ROLLED, PRESSED, AND FORGED STEEL SHAPES, PLATES, BARS, AND STRIP.

1.04 CONTRACTOR SUBMITTALS

A. Shop Drawings: The CONTRACTOR shall furnish complete shop drawings of all pipe supports, hangers, anchors, and guides, as well as calculations for special supports and anchors, in accordance with Section 01300, "Submittals."

PART 2 – PRODUCTS

2.01 GENERAL REQUIREMENTS

A. Code Compliance: All piping systems and pipe connections to equipment shall be properly supported, to prevent undue deflection, vibration, and stresses on piping, equipment, and structures. All supports and parts thereof shall conform to the requirements of ANSI/ASME B31.1, except as supplemented or modified by these Specifications. Supports for plumbing piping shall be in accordance with the latest edition of the applicable plumbing code, or local administration requirements.

B. Structural Members: Wherever possible, pipes shall be attached to structural members. Where it is necessary to frame structural members between existing members, such supplementary members shall be provided by the CONTRACTOR at no additional cost to the Owner. All supplementary members shall be in accordance with the requirements of the building code and the American Institute of Steel Construction.

C. Support Spacing: Supports for piping with the longitudinal axis in approximately a horizontal position shall be spaced to prevent excessive sag, bending and shear

stresses in the piping, with special consideration given where components, such as flanges and valves, impose concentrated loads. Spacing of supports shall be as specified herein and/or indicated on the Drawings.

D. Riser Supports: Where practical, risers shall be supported on each floor with riser clamps and lugs, independent of the connected horizontal piping.

E. Freestanding Piping: Freestanding pipe connections to equipment, like pumps, etc., shall be firmly attached to fabricated steel frames made of angles, channels, or I-beams anchored to the structure. Exterior, freestanding overhead piping shall be supported on fabricated pipe stands, consisting of pipe columns anchored to concrete footings, with horizontal, welded steel angles and U-bolts or clamps, securing the pipes.

F. Submerged Supports: All submerged piping shall be supported with Tangers, brackets, clips, or fabricated supports and anchors of Type 316 stainless steel, unless otherwise shown.

2.02 MANUFACTURED SUPPORTS

A. Stock Parts: Where not specifically shown or detailed, designs, generally accepted as exemplifying good engineering practice, using stock or production parts, shall be utilized wherever possible. Such parts shall be locally available, new, of best commercial quality, designed and rated for the intended purpose.

B. Suppliers, or equal:

1. Basic Engineers, Pittsburgh, PA;

2. Bergen-Paterson Corp., Boston, MA;

3. Elcen Metal Products Company, Franklin Park, IL;

4. ITT-Grinnell Corp., Warren, OH;

5. NPS Industries, Inc., Secaucus, NJ.

2.03 COATING

A. Galvanizing: Unless otherwise shown or specified, all fabricated pipe supports, other than stainless steel or non-ferrous supports, shall be blast-cleaned after fabrication and hot-dip galvanized in accordance with ASTM A 123.

B. Other Coatings: Other than the supports mentioned in Paragraph 2.03A, all supports shall receive protective coatings in accordance with the requirements of Section 09850, "Painting."

PART 3 – EXECUTION

3.01 INSTALLATION

A. General: All pipe supports, hangers, brackets, anchors, guides, and inserts shall be fabricated and installed in accordance with the manufacturer's printed instructions and

ANSI/ASME B31.1. All concrete inserts for pipe hangers and supports shall be coordinated with the formwork.

B. Appearance: Pipe supports and hangers shall be positioned in such a way as to produce an orderly, neat piping system. All hanger rods shall be vertical, without offsets. Hangers shall be adjusted to line up groups of pipes at the proper grade for drainage and venting, as close to ceilings or roofs as possible, without interference with other Work.

C. Pipe Support Spacing: The distance between supports for each size of pipe shall not exceed those listed in the attached schedule. However, if the pipe size to be supported is not listed in the schedule, the next smaller nominal pipe size spacing shall be used. In all cases, there shall be a minimum of one support per laying length of pipe on uninterrupted horizontal runs. This support shall be placed within one foot of the joint. If the pipe manufacturer recommends a smaller spacing interval than specified herein, then the manufacturer's spacing shall be used.

D. The distance between supports shall not exceed that listed in the following schedule unless otherwise noted:

Nominal Pipe Size (in.)	Metallic Piping (ft.)	Plastic, Fiberglass and Copper Piping (ft.)
½	5	3
¾ to 1 ½	6	3
2 to 3	6	4
4	10	5
4	10	5
6 and larger	10	6

3.02 FABRICATION

A. Quality Control: Pipe hangers and supports shall be fabricated and installed by experienced welders and fitters, using the best welding procedures available. Fabricated supports shall be neat in appearance without sharp corners, burrs, and edges.

- - END OF SECTION - -

SECTION 15100 - VALVES, GENERAL

PART 1 – GENERAL

1.01 THE REQUIREMENT

A. This Section consists of providing all tools, supplies, materials, equipment, and labor necessary for furnishing, epoxy coating, installing, adjusting, and testing of all valves and appurtenant work, complete and operable, as shown in the Drawings and/or as specified herein. Where buried valves are shown, the CONTRACTOR shall furnish and install valve boxes to grade, with covers, extensions, and position indicators.

B. The provisions of this Section shall apply to all valves and valve operators specified in the various Sections of these Specifications.

1.02 RELATED WORK SPECIFIED ELSEWHERE

A. Piping, General

B. Painting

C. Equipment General Provisions

1.03 REFERENCE SPECIFICATIONS, CODES, AND STANDARDS

A. Commercial Standards:

ANSI/AWWA C500	STANDARD FOR METAL-SEATED GATE VALVES FOR WATER-SUPPLY SERVICE
ANSI B1	GRAY IRON PIPE FLANGES AND FLANGED FITTINGS, CLASSES 25, 125, AND 250
ANSI B1	PIPE FLANGES AND FLANGED FITTINGS
ANSI/ASME B1.2	PIPE THREADS GENERAL PURPOSE (INCH).
ANSI/ASME B3	POWER PIPING
ASTM A36	SPECIFICATION FOR CARBON STRUCTURAL STEEL
ASTM A48	SPECIFICATION FOR GRAY IRON CASTINGS
ASTM A126	SPECIFICATION FOR GRAY IRON CASTINGS FOR VALVES, FLANGES, AND PIPE FITTINGS
ASTM A536	SPECIFICATION FOR DUCTILE IRON CASTINGS
ASTM B61	SPECIFICATION FOR STEAM OR VALVE BRONZE CASTINGS

ASTM B62	SPECIFICATION FOR COMPOSITION BRONZE OR OUNCE METAL CASTINGS
ASTM B148	SPECIFICATION FOR ALUMINUM BRONZE SAND CASTINGS
ASTM B584	SPECIFICATION FOR COPPER ALLOY SAND CASTINGS FOR GENERAL APPLICATIONS
ANSI/AWWA C504	RUBBER SEALED BUTTERFLY VALVES
AWWA C508	SWING CHECK VALVES FOR WATERWORKS SERVICE, 2 INCHES THROUGH 24 INCHES NPS
ANSI/AWWA C509	RESILIENT SEATED GATE VALVES, FOR WATER-SUPPLY SERVICE
AWWA C550	PROTECTIVE EPOXY INTERIOR COATINGS FOR VALVES AND HYDRANTS

1.04 QUALITY ASSURANCE

A. Valve Testing: Unless otherwise specified, each valve body shall be tested under a test pressure equal to twice its design water working pressure.

B. Bronze Parts: Unless otherwise specified, all interior bronze parts of valves shall conform to the requirements of ASTM B62, or, where not subject to dezincification, to ASTM B 584.

PART 2 – PRODUCTS

2.01 VALVES

A. General: The CONTRACTOR shall furnish all valves, valve-operating units, stem extensions, and other accessories as shown or specified. All valves and gates shall be new and of current manufacture. All shut-off valves, 6-inch and larger, shall have operators with position indicators. Where buried, these valves shall be provided with valve boxes and covers containing position indicators, and valve extensions. Shut-off valves mounted higher than 6-feet above working level shall be provided with chain operators. All valves shall have a minimum design pressure rating of 150 psi and capable of a test pressure of 300 psi. For service applications with pressures in excess of 150 psi, valves shall have a minimum pressure rating in excess of the service application working pressure.

B. Cast iron parts of valves shall meet the requirements of ASTM A126, "Standard Specifications for Grey Iron Castings for Valves, Flanges and Pipe Fittings, Class 'B'." Flanged ends shall be flat-faced and have bolt circle and bolt patterns conforming to ANSI B16.1 Class 125 unless otherwise specified hereinafter.

C. All castings shall be clean and sound, without defects of any kind and no plugging, welding or repairing of defects will be permitted. All bolt heads and nuts shall be hexagonal conforming to ANSI B18.2 and shall be type 316 stainless steel. Gaskets shall be full face and made of natural or synthetic elastomers in conformance with ANSI B16.21 suitable for

the service characteristics, especially chemical compatibility and temperature. Nonferrous alloys of various types shall be used for parts of valves as specified. Where no definite specification is given, the material shall be the recognized acceptable standard for that particular application.

D. All buried valves shall be provided with cast iron valve boxes unless otherwise indicated. The boxes shall be asphalt varnished, or enameled cast iron, adjustable to grade, and installed perpendicularly, centered around and covering the upper portions of the valve or valve operator, or the pipe. The top of each valve box shall be placed flush with finish grade unless otherwise indicated on the Drawings. Valve boxes shall be as specified elsewhere in this section. All buried valves through 48-inch shall have mechanical ends. Buried valves above 48-inches shall have flanged ends.

E. All buried valves and other valves located below the concrete operating deck or level, specified or noted to be key operated, shall have an operator to finish grade or deck level, a 2-inch square AWWA operating nut, and cover or box and cover, as may be required.

F. Valve Flanges: The flanges of valves shall be in accordance with Section entitled "Piping, General."

G. Protective Coating: Except where otherwise specified, ferrous surfaces, exclusive of stainless steel surfaces, in the water passages of all valves 4-inch and larger, as well as the exterior surfaces of all submerged valves, shall receive a fusion-bonded epoxy coating in accordance with AWWA C550. Flange faces of valves shall not be epoxy coated. The CONTRACTOR, through the valve manufacturer, shall certify in writing that such coating has been applied and tested in the manufacturing plant prior to shipment, in accordance with these Specifications.

H. Valve Operators: Valves shall be furnished with operators, provided by the valve manufacturer. All operators of a given type shall be furnished by the same manufacturer. All valve operators, regardless of type, shall be installed, adjusted, and tested by the valve manufacturer at the manufacturing plant. Operator orientation shall be verified with the CITY prior to installation. If this requirement is not met, changes to orientation shall be made at no additional cost.

I. All operators, unless otherwise specified, shall turn counterclockwise to open. Operators shall have the open direction clearly and permanently marked. All valve operators, manual, motor and pneumatic, shall be provided with the valve by the valve manufacturer. The CONTRACTOR, through the valve manufacturer, shall be solely responsible for the selection of the proper operator to meet the operating conditions specified herein. Field calibration and testing of the operators and valves to ensure a proper installation and an operating system shall be the responsibility of the CONTRACTOR.

J. All manual operators shall have levers or handwheels, unless otherwise shown. Where buried, the valves shall have extensions with square nuts or floor stands. Valves mounted higher than 6 feet above floor or operating level shall have chain operators. Unless otherwise shown or specified, valves of sizes 4-inch and larger shall have gear-assisted operators.

K. Operation of valves shall be designed so that the effort required to operate the handwheel, lever or chain shall not exceed 40 pounds applied at the extremity of the wheel or lever. The

handwheels on valves 14 inches and smaller shall not be less than 8 inches in diameter, and on valves larger than 14 inches the handwheel shall not be less than 12 inches in diameter.

L. Chainwheel operator shall be fabricated of malleable iron and pocketed type chainwheels with chain guards and guides. Chainwheel operators shall be marked with an arrow and the word "open" indicating direction to open. The operators shall have galvanized smooth welded link type chain. Chain that is crimped or has links with exposed ends shall not be acceptable.

M. Valve Labeling: A label shall be provided on all shut-off valves exclusive of hose bibbs. The label shall be of 1/16-inch plastic or stainless steel, minimum 2 inches by 4 inches in size, and shall be permanently attached to the valve or on the wall adjacent to the valve or as indicated by the CITY.

2.02 VALVE BOXES

A. Valve boxes shall be of the adjustable telescope type, cast iron, suitable to withstand heavy traffic. They shall be manufactured by U.S. Foundry or equal. The covers shall be marked SEWER. Bases shall be the round type. Boxes shall be coated with asphalt.

PART 3 – EXECUTION

3.01 VALVE INSTALLATION

A. General: All valves, gates, operating units, stem extensions, valve boxes, and accessories shall be installed in accordance with the manufacturer's written instructions and as shown and specified. All gates shall be adequately braced to prevent warpage and bending under the intended use. Valves shall be firmly supported to avoid undue stresses on the pipe.

B. Access: All valves shall be installed to provide easy access for operation, removal, and maintenance and to avoid conflicts between valve operators and structural members or handrails.

C. Valve Accessories: Where combinations of valves, sensors, switches, and controls are specified or shown on the drawings, it shall be the responsibility of the CONTRACTOR to properly assemble and install these various items so that all systems are compatible and operating properly. The relationship between interrelated items shall be clearly noted on shop drawing submittals.

- END OF SECTION -

SECTION 15105 - CHECK VALVES

PART 1 – GENERAL

1.01 THE REQUIREMENT

A. This Section consists of furnishing and installing all check valves in the types and sizes shown and specified, complete and operable, including epoxy coating, appurtenances and accessories, as shown in the Drawings and/or as specified herein.

1.02 RELATED WORK SPECIFIED ELSEWHERE

A. Valves, General

PART 2 – PRODUCTS

2.01 SWING CHECK VALVES (3-INCH AND LARGER)

A. General: Swing check valves for water, sewage, sludge and general service shall be of the weight type, in accordance with AWWA C508, unless otherwise specified below, full-opening; designed for a working pressure of 150 psi unless otherwise shown, and shall have a flanged cover piece to provide access to the disc. Corrosive ferrous surfaces of valves, 4-inch and larger, which will be in contact with water, shall receive a fusion-bonded epoxy coating conforming to AWWA C550.

B. Body: The valve body shall be of cast iron to ASTM A126, with flanged ends to ANSI B16.1, or mechanical joint ends, as shown.

C. Disc: The valve disc shall be of cast iron, ductile iron, or bronze to ASTM B62.

D. Seat and Rings: The valve seat and rings shall be of bronze to ASTM B92 or B148, or of Buna-N.

E. Hinge Pin: The hinge pin shall be of bronze or stainless steel.

F. Suppliers or Equal:

1. American-Darling Valve Co.
2. APCO (Valve and Primer Corp.).
3. Crane Company.
4. Kennedy Valve Mfg. Co. (ITT Grinnell).
5. Mueller Company.
6. Stockham Valves and Fittings.

PART 3 – EXECUTION

3.01 GENERAL

A. All valves shall be installed in accordance with provisions of Section 15000, "Valves, General."

- - END OF SECTION - -

SECTION 15109 - PLUG VALVES

PART 1 – GENERAL

1.01 THE REQUIREMENT

A. This Section consists of furnishing and installing plug valves, complete and operable, as shown on the Drawings and specified herein including operators, protective coatings, and appurtenant work.

1.02 RELATED WORK SPECIFIED ELSEWHERE

A. Valves, General

PART 2 – PRODUCTS

2.01 PLUG VALVES

A. Valves shall be of the non-lubricated, eccentric plug type with elastomer faced plugs equivalent to PEF/PEC models as manufactured by DeZurik Company or equal. The construction of the valve shall require the opening movement of the valve to cause the plug to rise off the seat contact rather than sliding from its seat.

B. Plug valves 6-inches and smaller shall have an 80 percent minimum port area. Plug valves 8-inches and larger shall be full opening with 100 percent port area.

C. All valves shall be provided with limit stops and rotate 90 degrees from fully open to fully closed and shall be capable of providing shut-off up to the full working pressure rating in either direction working pressure ratings are as follows:

Nominal Pipe Size (in.)	Working Pressure (psi)
2 to 12	175
14 to 26	150
42 to 72	125

D. Valves shall be bolted bonnet design and be provided with lever operators for interior and exposed service with nominal pipe sizes six (6) inches and less.

E. Interior and exposed service with nominal pipe sizes eight (8) inches and larger shall be provided with totally enclosed worm gear actuators. The actuators shall be properly sized to suit the maximum differential across the valve.

F. For buried or submerged service, valves shall be provided with an AWWA operating nut. Valves with nominal pipe sizes eight (8) inches and larger shall have permanently lubricated totally enclosed worm gear actuators.

G. Flanged valves shall be faced and drilled conforming to ANSI B16.1 Class 125. Mechanical joint bells shall conform to AWWA C111. Threaded ends shall conform to the NPT Standard.

H. All exposed nuts, bolts, springs, washers, etc. shall be type 316 stainless steel.

I. Valves shall have the standard face to face dimensions of AWWA gate valves for nominal pipe size three (3) to twelve (12) inches with flanged end connection.

J. Valve bodies and plugs shall be semi-steel conforming to the requirements of ASTM A126 Grade B, cast iron. Plugs shall be covered with neoprene for general service.

K. Valve seats shall be corrosion resistant consisting of a welded-in overlay of 90 percent pure nickel.

L. Valve bearings shall be replaceable type 316 series stainless steel for both the upper and lower journals.

M. Shaft seals shall be multiple ring V-type Buna-N packing. The stuffing box shall be designed to allow the packing to be adjusted and replaced when the valve is in service.

N. Gear actuators shall be totally enclosed worm gear type with permanently lubricated bronze bearings and shall be designed to handle the seating and unseating torque at the specified handwheel pull for applications with the maximum pressure differential in either direction.

2.02 TESTING

A. Shop Testing: Certified factory testing shall be provided for all components of the valve and operator system. Valves and operators shall be shop tested in accordance with the requirements in the latest revision of AWWA C504, including performance tests, leakage test, hydrostatic tests, and proof-of-design tests. The Vendor shall submit certified copies of the reports covering the test for acceptance by the CITY.

PART 3 – EXECUTION

3.01 GENERAL

A. All plug valves shall be installed in strict accordance with the Supplier's published recommendations and the applicable provisions of Section entitled "Valves, General."

B. All valve exteriors shall be painted as specified in the Section entitled "Painting." All exposed interior corrosive ferrous surfaces of valves 4-inch and larger, as well as the exterior surfaces of buried valves, shall receive a fusion-bonded epoxy coating conforming to AWWA C550.

- - - END OF SECTION - - -

SECTION 15114 - MISCELLANEOUS VALVES

PART 1 – GENERAL

1.01 THE REQUIREMENT

A. The CONTRACTOR shall furnish and install miscellaneous valves as shown in the drawings and as specified herein, complete and operable including accessories and, where designated, operators, all in accordance with the requirements of the Contract Documents.

1.02 RELATED WORK SPECIFIED ELSEWHERE

A. Valves, General.

B. Valve Operators.

PART 2 – PRODUCTS

2.01 CAM LEVER COUPLINGS

A. Cam lever couplings shall be the size as shown on the Drawings and shall be constructed of type 316 stainless steel.

B. The couplings shall be female disconnect with plug.

C. The cam lever couplings shall be as manufactured by Kamlok, or equal.

2.02 GAUGE COCKS

A. Gauge cocks shall be threaded all bronze, tee handle, as manufactured by Crane Co., or equal.

2.03 POTABLE WATER HOSE BIBBS

A. Potable water hose bibbs shall be provided with 3/4-inch union inlet, vacuum breaker, tee handle rough chrome plated equal to Chicago Faucet No. 998.

B. Provide permanent plastic or brass tags located above the bibbs which state "POTABLE WATER." Letters shall be 3/4-inch height.

PART 3 – EXECUTION

3.01 INSTALLATION

A. All valves shall be installed in accordance with the manufacturer's printed recommendations.

B. Install valves and cocks in horizontal piping with the valve stem in the vertical upright position.

C. Install valves and cocks to provide adequate clearance to permit easy operation of the valve hand wheel and permit servicing of the valve packing.

- - END OF SECTION - -

SECTION 15995 - PIPELINE TESTING

PART 1 – GENERAL

1.01 THE REQUIREMENT

A. This Section consists of all work associated with performing flushing and testing of all pipelines and appurtenant piping, complete, including conveyance of test water from CITY-designated source to point of use and all disposal thereof.

PART 2 – PRODUCTS

2.01 MATERIALS REQUIREMENTS

A. All test equipment, temporary valves or bulkheads, temporary vents or drains, or other water control equipment and materials shall be determined and furnished by the CONTRACTOR subject to the CITY'S review. No materials shall be used which would be injurious to the construction or its future function.

PART 3 – EXECUTION

3.01 GENERAL

A. The CONTRACTOR shall make all necessary provisions for conveying the water from the CITY designated source to the points of use.

B. All pressure pipelines shall be tested. All testing operations shall be performed in the presence of the CITY.

3.02 FLUSHING

A. At the conclusion of the installation work, the CONTRACTOR shall thoroughly clean all new liquid conveying pipe by flushing with water or other means to remove all dirt, stones, pieces of wood, etc., which may have entered the pipe during the construction period. If after this cleaning any obstructions remain, they shall be corrected by the CONTRACTOR, at his own expense, to the satisfaction of the CITY. Liquid conveying pipelines shall be flushed at the rate of at least 2.5 feet per second for a duration suitable to the CITY or shall be flushed by other methods approved by the CITY.

3.03 HYDROSTATIC TESTING OF PIPING

A. Following pipeline flushing, the CONTRACTOR shall hydrostatically test all pipelines either in sections or as a unit. No section of the pipeline shall be tested until all field placed concrete or mortar have attained an age of 14 days. The test shall be made by closing valves when available, or by placing temporary bulkheads in the pipe and filling the line slowly with water. The CONTRACTOR shall be responsible for ascertaining that all test bulkheads are suitably restrained to resist the thrust of the test pressure without damage to, or movement of, the adjacent pipe. Care shall be taken to see that all air vents are open during filling.

B. The pipeline shall be filled at a rate which will not cause any surges or exceed the rate at which the air can be released through the air valves at a reasonable velocity and all the air within the pipeline shall be properly purged. After the pipeline or section thereof has been filled, it shall be allowed to stand under a slight pressure for at least 24 hours to allow the concrete or mortar lining, as applicable, to absorb what water it will and to allow the escape of air from any air pockets. During this period, bulkheads, valves, and connections shall be examined for leaks. If leaks are found, corrective measures satisfactory to the CITY shall be taken.

C. The test pressure for the hydrostatic test shall be as specified in the Section entitled "Piping Schedule."

D. The hydrostatic test shall consist of holding the test pressure on the pipeline for a period of 2 hours. All visible leaks shall be repaired in a manner acceptable to the CITY.

E. The maximum allowable leakage for pipelines shall be determined based on the following formula:

$$L = \frac{(S)\,(D)\,[(P)]^{1/2}}{148{,}000}$$

In which,

L = Allowable Leakage, Gallons per Hour

S = Total Length of Pipe Being Tested, In Feet

D = Nominal Inside Pipe Diameter, In Inches

P = Average Test Pressure, In PSI Gauge[1]

In the case of pipelines that fail to pass the prescribed leakage test, the CONTRACTOR shall determine the cause of the leakage, shall take corrective measures necessary to repair the leaks, and shall again test the pipelines. The CONTRACTOR shall provide all reaction blocking and necessary plugs and caps required to test all piping installed as part of this Contract.

F. The CONTRACTOR shall submit to the CITY a detailed description of the testing procedures to be utilized.

-- END OF SECTION --

SECTION 16050 - ELECTRICAL GENERAL PROVISIONS

PART 1 – GENERAL

1.01 THE REQUIREMENT

A. Furnish all labor, materials, equipment and incidentals required for a complete electrical system as hereinafter specified and shown on the Drawings.

1.02 RELATED DOCUMENTS

A. Drawings and General Provisions of the Contract apply to work of this Section.

B. Other Specification Sections related to work specified in this Section are as follows:

1. All electrical sections (Division 16).

2. All instrumentation sections (Division 17).

1.03 WORK INCLUDED

A. The work, apparatus and materials which shall be furnished under these Specifications and accompanying Drawings shall include all items listed hereinafter and/or shown on the Drawings. Certain equipment will be furnished as specified in other Sections of these Specifications which will require wiring thereto and/or complete installation as indicated. All materials necessary for the complete installation shall be furnished and installed by the CONTRACTOR to provide complete power, lighting, communication systems, and instrumentation wiring and control systems as indicated on the Drawings and / or as specified herein.

B. The work shall include complete testing of all equipment and wiring at the completion of the work and making any minor connection changes or adjustments necessary for the proper functioning of the system and equipment. All workmanship shall be of the highest quality; sub-standard work will be rejected.

C. Mount and wire flow indicators, and process instruments furnished under other Sections of these Specifications.

D. Make all field connections to process instrument panels, SCADA panels and other control panels furnished under other Sections of these Specifications.

E. For process instrumentation; furnish and install all conduit, wire and interconnections between primary elements, transmitters, local indicators and receivers.

F. Furnish and install all conduit and wire between motor operated gates, louvers, windows, and their control stations.

G. Wire all heating, ventilating, and air conditioning equipment furnished under other Sections of this Specification.

1.04 GENERAL INFORMATION

A. Each bidder or his authorized representatives shall, before preparing his proposal, visit all areas of the existing buildings and structures in which work under this Section is to be performed and inspect carefully the present installation. The submission of the proposal by this bidder shall be considered evidence that he or his representative has visited the buildings and noted the locations and conditions under which the work will be performed and that he takes full responsibility for a complete knowledge of all factors governing his work.

B. All power interruptions to existing equipment shall be at the CITY's convenience. Each interruption shall have prior approval.

C. It is the intent of these Specifications that the electrical system shall be suitable in every way for the service required. All material and all work which may be reasonably implied as being incidental to the work of this Section shall be furnished at no extra cost.

1.05 CODES, INSPECTION AND FEES

A. All material and installation shall be in accordance with the latest edition of the National Electrical Code and all applicable national, local and state codes. Pay all fees required for permits and inspections.

1.06 SERVICE AND METERING

A. Permanent electrical power and metering will be provided by Florida Power and Light (FPL) as indicated on the Drawings. Furnish and install the secondary service conduit, wire, connectors, meter can, disconnect, and any hand/man holes as required to extend the service to the station as shown on the Drawings. CONTRACTOR shall coordinate with FPL for all issues pertaining to service requirements, installation, and startup by FPL.

1.07 INTERPRETATION OF DRAWINGS

A. The Drawings are not intended to show exact locations of conduit runs.

B. All three-phase circuits shall be run in separate conduits unless otherwise shown on the Drawings.

C. Unless otherwise approved by the CITY, conduit shown exposed shall be installed exposed; conduit shown concealed shall be installed concealed.

D. Where circuits are shown as "home-runs" all necessary fittings and boxes shall be provided for a complete raceway installation.

E. The CONTRACTOR shall coordinate the work of the different trades so that interferences between conduits, piping, and equipment, architectural and structural work will be avoided. All necessary offsets shall be furnished so as to take up a minimum space and all such offsets, fittings, etc., required to accomplish this shall be furnished and installed by the CONTRACTOR without additional expense to the CITY. In case interference develops the CITY's authorized representative is to decide which equipment, piping, etc., must be relocated, regardless of which was installed first.

F. The locations of equipment, fixtures, outlets, and similar devices shown on the Drawings are approximate only. Exact locations shall be as approved by the CITY during construction. Obtain in the field all information relevant to the placing of electrical work and in case of any interference with other work, proceed as directed by the CITY and furnish all labor and materials necessary to complete the work in an approved manner.

G. All floor mounted electrical equipment, including but not limited to: switchgear, motor control centers, unit substations, transformers, variable frequency drives, and control panels shall be placed on a four inch (4") concrete housekeeping pad.

H. Surface mounted panel boxes, junction boxes, conduit, etc., shall be supported by spacers to provide a clearance between wall and equipment.

I. Circuit layouts shown are not intended to show the number of fittings, or other installation details. Furnish all labor and materials necessary to install and place in satisfactory operation all power, lighting, and other electrical systems shown. Additional circuits shall be installed whenever needed to conform to the specific requirements of the equipment.

J. The ratings of motors and other electrically operated devices together with the size shown for their branch circuit conductors and conduits are approximate only and are indicative of the probable power requirements insofar as they can be determined in advance of the purchase of equipment. It is the CONTRACTOR's responsibility to verify equipment requirements prior to purchase of associated equipment.

K. All connections to equipment shall be made as shown, specified, and directed and in accordance with the approved shop and setting drawings, regardless of the number of conductors shown on the Electrical Drawings.

L. All necessary temporary power requirements are the responsibility of the CONTRACTOR and shall be furnished, installed, and removed at no cost to the CITY.

M. Provide and place all sleeves for conduits penetrating floors, walls, partitions, etc. Locate all necessary slots for electrical work and form before concrete is poured.

N. All cutting and patching necessary throughout the existing site shall be done in a thoroughly workmanlike manner.

1.08 SIZE OF EQUIPMENT

A. Investigate each space in the building through which equipment must pass to reach its final location. If necessary, the manufacturer shall be required to ship his material in sections sized to permit passing through such restricted areas in the building.

B. The equipment shall be kept upright at all times. When equipment has to be tilted for ease of passage through restricted areas during transportation, the manufacturer shall be required to brace the equipment suitably, to insure that the tilting does not impair the functional integrity of the equipment.

1.09 COMPONENT INTERCONNECTIONS

A. Component equipment furnished under this Specification will not be furnished as integrated systems.

B. Analyze all systems components and their shop drawings; identify all terminals and prepare drawings or wiring tables necessary for component interconnection.

1.10 MATERIALS

A. The materials used in all systems shall be new, unused and as hereinafter specified. All materials where not specified shall be of the very best of their respective kinds. Samples of materials or manufacturer's Specifications shall be submitted for approval as required by the CITY.

B. Materials and equipment used shall be Underwriters Laboratories, Inc. listed.

C. Electrical equipment shall be adequately protected against mechanical injury or damage by water during construction. Electrical equipment shall not be stored out-of-doors. Electrical equipment shall be stored in dry permanent shelters. If any apparatus has been damaged, such damage shall be repaired by the CONTRACTOR at his own cost and expense. If any apparatus has been subject to possible injury by water, it shall be thoroughly dried-out and put through such special tests as directed by the CITY, at the cost and expense of the CONTRACTOR, or shall be replaced by the CONTRACTOR at his own expense.

D. All electrical panels, enclosures, raceways, conduits, wireways, boxes, cabinets, etc., shall be fabricated of metal. Non-metallic substitutes are not acceptable. This does not apply to buried work.

1.11 SHOP DRAWINGS

A. Shop drawings shall be submitted for approval of all materials, equipment, apparatus, and other items as required by the CITY.

B. Shop drawings shall be submitted for the following equipment:

1. Enclosed Circuit Breakers

2. Motors

3. Motor Starters

4. Disconnect Switches

5. Wire and Cable

6. Control Panels

C. The manufacturers name and product designation or catalog numbers shall be submitted for the following material:

1. Conduit

2. Receptacles

3. Boxes and Fittings

4. Switches

5. Control Relays

6. Terminal Blocks

D. Prior to submittal by the CONTRACTOR, all shop drawings shall be checked for accuracy and Contract requirements. Shop drawings shall bear the date checked and shall be accompanied by a statement that the shop drawings have been examined for conformity to Specifications and Drawings. This statement shall also list all discrepancies with the Specifications and Drawings. Shop drawings not so checked and noted shall be returned.

E. The CITY's check shall be only for conformance with the design concept of the project and compliance with the Specifications and Drawings. The responsibility of, or the necessity of, furnishing materials and workmanship required by the Specifications and Drawings which may not be indicated on the shop drawings is included under the work of this Section.

F. No material shall be ordered or shop work started until the CITY's approval of shop drawings has been given.

1.12 TESTS

A. Test all systems and repair or replace all defective work. Make all necessary adjustments to the systems and instruct the CITY's personnel in the proper operation of the systems.

1.13 MANUFACTURERS' SERVICES

A. Coordinate with the City for manufacturers testing and start-up services for the following equipment:

1. Control Panel

2. SCADA System

B. The manufacturers of the above listed equipment shall provide an experienced Field Service Engineer to accomplish the following tasks:

1. The equipment shall be visually inspected upon completion of installation and prior to energization to assure that wiring is correct, interconnection complete and the installation is in compliance with the manufacturer's criteria. Documentation shall be reviewed to assure that all Drawings, operation and maintenance manuals, parts list and other data required to check out and sustain equipment operation is available on site. Documentation shall be red-lined to reflect any changes or modifications made during the installation so that the "as-built" equipment configuration will be correctly defined. Spare parts shall be inventoried to assure correct type and quantity.

2. The Field Service Engineers shall provide engineering support during the energization and check out of each major equipment assembly. They shall perform

any calibration or adjustment required for the equipment to meet the manufacturer's performance Specifications.

3. Upon satisfactory completion of equipment test, they shall provide engineering support of system tests to be performed in accordance with manufacturer's test Specifications.

1.14 RECORD DRAWINGS

A. As the work progresses, legibly record all field changes on a set of project Contract Drawings. When the project is complete, furnish a complete set of reproducible "as-built" drawings for the Project Record Documents.

PART 2 – PRODUCTS - NOT USED.

PART 3 – EXECUTION - NOT USED.

- - END OF SECTION - -

SECTION 16110 - RACEWAYS

PART 1 – GENERAL

1.01 THE REQUIREMENT

A. Furnish and install complete raceway systems as shown on the Drawings and as specified herein.

1.02 RELATED DOCUMENTS

A. Drawings and General Provisions of the Contract apply to work of this Section. Other Specification Sections related to work specified in this Section are as follows:

1. All electrical sections (Division 16).

2. All instrumentation sections (Division 17).

1.03 APPLICATIONS

A. Except where otherwise shown on the Drawings, or hereinafter specified, all exposed raceways shall be in rigid steel conduit.

B. Rigid steel conduit shall be used at all locations (underground and within structures) as raceways for shielded process instrumentation wiring and shielded control wiring except where otherwise shown on the Drawings.

C. Electrical metallic tubing shall not be used in process equipment rooms, chemical rooms, rooms below grade, concrete slabs in contact with earth or liquid, out-of-doors, hazardous areas or for process instrumentation.

D. Schedule 80 PVC shall be used underground where concrete encasement is not called for.

E. All conduit of a given type shall be the product of one manufacturer.

F. Unless otherwise hereinafter specified or shown on the Drawings, all boxes shall be metal.

G. Exposed switch, outlet and control station boxes and fittings shall be malleable iron or cast aluminum.

H. Concealed switch, outlet and control station boxes shall be pressed steel.

I. Terminal boxes, junction boxes, pull boxes, etc. used in areas designated as NEMA-4 or NEMA-4X shall be 316 stainless steel with a cover gasket.

J. Combination expansion-deflection fittings shall be used where exposed or embedded conduits cross structure expansion joints.

K. Liquid-tight flexible metal conduit (between 18" and 3 feet in length) shall be used for all motor terminations and other equipment where vibration is present. All flexible conduits shall use a bonding wire unless a ground wire is included.

L. Flexible couplings shall be used in hazardous locations for all motor terminations and other equipment where vibration is present.

PART 2 – PRODUCTS

2.01 RIGID CONDUIT

A. Steel conduit shall be hot-dipped galvanized as manufactured by the Youngstown Sheet and Tube Company, Allied Tube and Conduit Corporation, Wheeling-Pittsburgh Steel Corporation, or approved equal.

B. PVC conduit used underground shall be rigid polyvinyl chloride type Schedule 80 as manufactured by Carlon, an Indian Head Company, Phillips Petroleum Company, Triangle Pipe and Tube Company, Inc., or approved equal.

C. Fiber conduit shall be Type 1 as manufactured by the Flinc Kote Company or approved equal.

2.02 ELECTRICAL METALLIC TUBING

A. Electrical metallic tubing shall be hot-dipped galvanized steel as manufactured by the Youngstown Sheet and Tube Company, Allied Tube and Conduit Corporation, Wheatland Tube Company, or approved equal.

2.03 LIQUID TIGHT, FLEXIBLE METAL CONDUIT, COUPLINGS AND FITTINGS

A. Liquid-tight, flexible metal conduit shall be Sealtite, Type UA, manufactured by the Anaconda Metal Hose Division, Anaconda American Brass Company, American Flexible Conduit Company, Inc., Universal Metal Hose Company, or approved equal.

B. Fittings used with flexible conduit shall be of the screw-in type as manufactured by the Thomas and Betts Company, Crouse-Hinds Company, or approved equal.

2.04 FLEXIBLE COUPLINGS

A. Flexible couplings shall be as manufactured by the Crouse-Hinds Company, Appleton Electric Company, or approved equal.

2.05 BOXES AND FITTINGS

A. Pressed steel switch and outlet boxes shall be hot-dipped galvanized as manufactured by the Raco Manufacturing Company, Adalet Company, O.Z. Manufacturing Company, or approved equal.

B. Terminal boxes, junction boxes, pull boxes etc., shall be steel unless otherwise shown on the Drawings. Boxes shall be galvanized and have continuously welded seams. Welds shall be ground smooth and galvanized. Box bodies shall be flanged and shall

not have holes or knockouts. Box bodies shall not be less than 14 gauge metal and covers shall not be less than 12 gauge metal. Covers shall be gasketed and fastened with stainless steel screws. Boxes shall be as manufactured by Hoffman Engineering Company or approved equal. NEMA-4 boxes shall be 316 stainless steel.

C. Cast iron boxes and fittings shall be galvanized with cast galvanized covers and corrosion - proof screws as manufactured by the Crouse-Hinds Company, Appleton Electric Company, or approved equal.

D. Cast aluminum boxes and fittings shall be copper-free aluminum with cast aluminum covers and corrosion proof screws as manufactured by the Killark Electric Company, Crouse-Hinds Company, Appleton Electric Company, or approved equal.

E. Steel elbows and couplings shall be hot-dipped galvanized. An extra 40 mil PVC protective coating shall be provided when used with PVC coated steel conduit. Joints shall be tapped.

F. Electrical metallic tubing fittings shall be of the raintight, concrete-tight, steel compression type as manufactured by the Appleton Electric Company, Crouse-Hinds Company, or approved equal.

G. Conduit hubs shall be as manufactured by Meyers Electric Products, Inc., Raco Division, Appleton Electric Company, or approved Equal.

H. Conduit wall seals shall be Type WSK as manufactured by the O.Z. Electrical Manufacturing Company, or approved equal.

I. Combination expansion-deflection fittings shall be Type XD as manufactured by the Crouse-Hinds Company or approved equal.

PART 3 – EXECUTION

3.01 INSTALLATION

A. Conduit smaller than 3/4 inch electrical trade size shall not be used, nor shall any conduit run have more than three (3) 90 degree bends. Pull boxes shall be provided as required or directed to maintain total bends to less than or equal to 270 degrees.

B. An equipment grounding conductor sized per article 250 of the latest version of the N.E.C. shall be installed in every raceway whether or not shown on the Drawings.

C. All underground conduit shall be buried a minimum of 24 inches below grade. All joints shall be sealed with plastic tape.

D. A three (3) inch wide warning tape, yellow with black stenciled letters "CAUTION - CAUTION - CAUTION - ELECTRICAL LINE BURIED BELOW" shall be installed between 6-18 inches above, and along the entire length of all underground conduit.

E. No wire shall be pulled until the conduit system is complete in all details, or in the case of concealed work, until all rough plastering or masonry has been completed.

F. The ends of all conduits shall be tightly plugged to exclude dust and moisture while the buildings are under construction.

G. Metallic conduit supports shall be spaced at intervals of eight (8) feet or less, as required to obtain rigid construction. PVC shall be supported at intervals not exceeding 5 feet.

H. Single conduits shall be supported by means of one-hole conduit clamps in combination with one-screw back plates to raise conduits from the surface. Multiple runs of conduits shall be supported on trapeze type hangers with steel horizontal members and threaded hanger rods. The rods and associated installation hardware shall be stainless steel and not less than 5/16 inch diameter.

I. Conduit hangers shall be attached to structural steel by means of beam or channel clamps. Where attached to concrete surfaces, concrete inserts of the spot type shall be provided.

J. All conduits on exposed work shall be run at right angles to and parallel with the surrounding walls, floors and ceilings. Diagonal runs shall not be allowed. Bends in parallel conduit runs shall be concentric. All conduits shall be run straight and true.

K. No unbroken run shall exceed 500 feet in length. This length shall be reduced by 75 feet for each 90 degree elbow.

L. Conduit terminating in pressed steel boxes shall have double locknuts and insulated bushings.

M. Conduits terminating in gasketed enclosures or outdoor equipment shall be terminated with conduit hubs.

N. Conduit wall seals shall be used for all conduits penetrating walls below grade or other locations shown on the Drawings.

O. The ends of all conduits terminating in panels, cabinets, and equipment in air-conditioned rooms shall be filled with closed cell foam. Filling shall be done after the cable has been pulled in order to prevent moisture in the terminating enclosure. Foam shall be placed such that condensation / water can not accumulate above the foam. Conduit seals may have to be provided and installed to accommodate this condition.

P. Conduit stub outs for future construction shall be provided with threaded ends and have threaded PVC end caps at each end.

Q. Galvanized steel conduit entering manholes and below grade pull boxes shall be terminated with grounding type bushings which shall be connected to a 5/8"x10' ground rod with a #6 bare copper wire.

R. Exposed outside branch circuits shall be installed in galvanized steel conduits. Underground circuits shall be installed directly to the respective motor control centers, lighting panels, etc., except stainless steel pull boxes shall be wall mounted on structures to eliminate excessive bends. With prior approval, below grade pull boxes, equal to Brooks #2424 (minimum), with hot-dip galvanized covers and frames, may be used. Splices shall not be made in above or below grade pull boxes without prior approval.

S. All field cut threads on galvanized steel conduit shall be cleaned and painted with zinc-rich paint before installing.

T. All conduits terminating through concrete shall be hot-dipped galvanized steel and painted with bitumastic from 6 inches below to 6 inches above slab.

U. Conduits shall not enter an equipment enclosure on the top of the enclosure. The intent of this is to assure that any condensation that does accumulate in the conduits will not drip on the electrical equipment within the enclosure.

- - END OF SECTION - -

SECTION 16120 - WIRES AND CABLES

PART 1 – GENERAL

1.01 THE REQUIREMENT

A. Furnish, install and test all wire, cable, and appurtenances as shown on the Drawings and as hereinafter specified.

1.02 RELATED DOCUMENTS

A. Drawings and General Provisions of the Contract apply to work of this Section. Other Specification Sections related to work specified in this Section are as follows:

1. All electrical sections (Division 16).

2. All instrumentation sections (Division 17).

1.03 APPLICATIONS

A. Wire for lighting and receptacle circuits above grade shall be Type THWN. All circuits either underground or passing through sections of conduit that are below grade shall be XHHW stranded copper.

B. Power wiring for all motor circuits shall be Type XHHW, stranded copper.

C. Single conductor wires for control, discrete condition indication and metering shall be Type XHHW or THWN No. 14 AWG, stranded.

D. Multi-conductor control cable shall be No. 14 AWG, stranded with integral conductor numbering stenciled on the jacket of each conductor.

E. Wire for process continuous signal instrumentation shall be shielded pairs or shielded triads, No. 18 or 16 AWG, stranded, depending on length of run, as noted on the Drawings.

F. Conductors smaller than No. 12 AWG shall not be used for power wiring.

1.04 SUBMITTALS

A. Samples of proposed wire and cable shall be submitted for approval. Each sample shall have the size, type of insulation and voltage stenciled on the jacket.

B. Approved samples will be sent to the project location for comparison by the CITY with the wire actually installed.

C. Installed, unapproved or unmarked wire shall be removed and replaced with approved wires at no additional cost to the CITY.

PART 2 – PRODUCTS

2.01 MATERIALS

A. All wires and cables shall be of annealed, 98 percent conductivity, soft drawn copper conductors.

B. All conductors shall be stranded.

C. Type XHHW shall be cross-linked polyethylene (XLP); as manufactured by the Hi-Tech Company, Rome Cable Corporation, The Okonite Company or approved equal.

D. Type THWN shall be as manufactured by the Hi-Tech Company, Rome Cable Corporation, The Okonite Company or approved equal.

E. Process instrumentation wire shall be twisted pair, 600 volt, PVC or polyethylene insulated, aluminum/polyester tape shielded, polyvinyl chloride jacketed, type "TC" as manufactured by the American Insulated Wire Company, Belden Corporation, "Beldfoil", or approved equal. Multiconductor cables with individually shielded twisted pairs shall be installed where indicated.

F. Multiconductor control cable shall be stranded, 600 volt, cross-linked "XLP" insulated, polyvinyl chloride jacketed, type "TC" as manufactured by the American Insulated Wire Company, Rome Cable Corporation type CT-B, or approved equal.

G. All wires and cables shall be factory marked with standard markings along full length of cable.

PART 3 – EXECUTION

3.01 INSTALLATION

A. All conductors shall be carefully handled to avoid kinks or damage to insulation.

B. Lubricants shall be used to facilitate wire pulling. Lubricants shall be U.L. listed for use with the insulation specified.

C. Shielded instrumentation wire shall be installed from terminal to terminal with no splicing at any intermediate point.

D. Shielded instrumentation wire shall be installed in rigid steel conduit with no other type of wiring in the same conduit. Instrumentation cables shall be separated from control cables in pull boxes.

E. Shielding on instrumentation wire shall be grounded at the transmitter end only, or as directed by the supplier of the instrumentation equipment.

F. Wire and cable connections to terminals, splices, and taps shall be made with compression connectors. Connections of insulated conductors shall be insulated and covered. All connections shall be made using materials and installation methods in accordance with instructions and recommendations of the manufacturer of the particular item of wire and cable. The conductivity of all completed connections shall be not less

than that of the uncut conductor. The insulation resistance of all completed connections of insulated conductors shall be not less than that of the uncut conductor.

G. All wire and cable shall be continuous and without splices between points of connection to equipment terminals, except a splice will be permitted by the CITY if the length required between the points of connection exceeds the greatest standard shipping length available from the manufacturer specified or approved by the CITY as the manufacturer of the particular item of wire and cable.

3.02 TESTS

A. All 600 volt wire insulation shall be tested with a megohm meter after installation. Tests shall be made at not less than 1,000 VDC.

- - END OF SECTION - -

SECTION 16195 - ELECTRICAL IDENTIFICATION

PART 1 – GENERAL

1.01 THE REQUIREMENT

A. All electrical equipment shall be properly identified in accordance with these Specifications and the Contract Drawings. All switchgear, switchboards, motor control centers, variable frequency drives, lighting and distribution panelboards, combination starters, control panels, pull/junction boxes, enclosures, disconnect switches, control stations, and similar equipment shall be identified in the manner described, or in an equally approved manner.

B. The types of electrical identification specified in this section include, but are not limited to, the following:

1. Exposed conduit color banding.
2. Operational instructions and warnings.
3. Danger signs.
4. Equipment/system identification signs.
5. Nameplates.

1.02 RELATED DOCUMENTS

A. Drawings and General Provisions of the Contract apply to work of this Section. Other Specification Sections related to work specified in this Section are as follows:

1. All electrical sections (Division 16).
2. All instrumentation sections (Division 17).

1.03 NAMEPLATES

A. "Pump Station 012 nameplates shall be securely mounted on the doors of all panels.

1.04 LETTERING AND GRAPHICS

A. The CONTRACTOR shall coordinate names, abbreviations, and other designations used in the electrical identification work with the corresponding designations shown, specified or scheduled. Provide numbers, lettering, and wording as indicated or, if not otherwise indicated, as recommended by manufacturers or as required for proper identification and operation/maintenance of the electrical systems and equipment.

1.05 SUBMITTALS

A. The CONTRACTOR shall obtain from the equipment manufacturer and submit shop drawings. Each submittal shall be identified by the applicable Specification section.

1.06 SHOP DRAWINGS

A. Each submittal shall be complete in all respects, incorporating all information and data listed herein and all additional information required for evaluation of the proposed equipment's compliance with the Contract Documents.

B. Partial, incomplete, or illegible submittals will be returned to the CONTRACTOR without review for resubmittal.

C. Shop drawings shall include but not be limited to equipment specifications and product data sheets identifying all materials used and methods of fabrication.

PART 2 – PRODUCTS

2.01 MANUFACTURERS

A. The material covered by these Specifications is intended to be standard material of proven performance as manufactured by reputable concerns. Material shall be fabricated, constructed, and installed in accordance with the best practices of the trade, and shall operate satisfactorily when installed as specified herein and shown on the Drawings.

2.02 NAMEPLATES

A. Nameplates shall be engraved, high pressure plastic laminate, black with white lettering.

2.03 HIGH VOLTAGE SIGNS

A. Standard "DANGER" signs shall be of baked enamel finish on 20 gage steel; of standard red, black and white graphics; 14 inches by 10 inches size except where 10 inches by 7 inches is the largest size which can be applied where needed, and except where a larger size is needed for adequate vision.

2.04 CONDUIT MARKERS

A. Conduit markers shall be bronze metal tag 1/2 inch in diameter, with 1/8 inch hole, with copper wire through hole and attached to conduit by twisting ends of wire. Lettering shall indicate conduit numbers.

2.05 WIRE MARKERS

A. Wire markers shall be self-vulcanizing type of sufficient width to include full functional tag information. Signal lettering shall indicate I/O id tag numbers.

PART 3 – - EXECUTION

3.01 NAMEPLATES

A. Nameplates shall be attached to the equipment enclosures with (2) two stainless steel sheet metal screws for nameplates up to 2-inches wide. For nameplates over 2-inches wide, four (4) stainless steel sheet metal screws shall be used, one (1) in each corner of the nameplate. The utilization of adhesives is not permitted.

3.02 CONDUIT IDENTIFICATION

A. Where electrical conduit is exposed in spaces with exposed mechanical piping which is identified by a color coded method, apply color coded identification on the electrical conduit in a manner similar to the piping identification. Except as otherwise indicated, use orange as the coded color for conduit marker backgrounds. Conduit identification shall be made after the conduit has been painted.

3.03 OPERATIONAL IDENTIFICATION AND WARNINGS

A. Wherever reasonably required to ensure safe and efficient operation and maintenance of the electrical systems and electrically connected mechanical systems and general systems and equipment, including prevention of misuse of electrical facilities by unauthorized personnel, install plastic signs or similar equivalent identification, instruction, or warnings on switches, outlets, and other controls, devices, and covers or electrical enclosures. Where detailed instructions or explanations are needed, provide plasticized tags with clearly written messages adequate for the intended purposes. Signs shall be attached as specified above for nameplates.

- - END OF SECTION - -

SECTION 16440 - DISCONNECT SWITCHES

PART 1 – GENERAL

1.01 THE REQUIREMENT

A. The CONTRACTOR shall furnish and install separately mounted, individual disconnect switches as specified herein and indicated on the Drawings.

1.02 RELATED DOCUMENTS

A. Drawings and General Provisions of the Contract apply to work of this Section. Other Specification Sections related to work specified in this Section are as follows:

1. All electrical sections (Division 16).

2. All instrumentation sections (Division 17).

1.03 SUBMITTALS

A. The CONTRACTOR shall obtain from the equipment manufacturer and submit the following:

1. Shop Drawings

2. Spare Parts List

B. Each submittal shall be identified by the applicable specification section.

1.04 SHOP DRAWINGS

A. Each submittal shall be complete in all respects, incorporating all information and data listed herein and all additional information required for evaluation of the proposed equipment's compliance with the Contract Documents.

B. Partial, incomplete or illegible submittals will be returned to the CONTRACTOR without review for resubmittal.

C. Shop drawings shall include but not be limited to:

1. Equipment specifications and product data sheets.

2. Complete layout and installation drawings with clearly marked dimensions for each type/size/rating of disconnect switch.

3. Assembled weight of each unit.

D. The shop drawing information shall be complete and organized in such a way that the CITY can determine if the requirements of these Specifications are being met. Copies of technical bulletins, technical data sheets from "soft-cover" catalogs, and similar information which is "highlighted" or somehow identifies the specific equipment items that the CONTRACTOR intends to provide are acceptable and shall be submitted.

1.05 TOOLS, SUPPLIES, AND SPARE PARTS

A. The equipment shall be furnished with all special tools necessary to disassemble, service, repair, and adjust the equipment, and with all spare parts as recommended by the equipment manufacturer.

B. One complete set of spare fuses for each ampere rating installed shall be furnished and delivered to the CITY at the time of final inspection.

C. Spare parts lists, included with the shop drawing submittal, shall indicate specific sizes, quantities, and part numbers of the items to be furnished. Terms such as "1 lot of packing material" are not acceptable.

D. Parts shall be completely identified with a numerical system to facilitate parts inventory control and stocking. Each part shall be properly identified by a separate number. Those parts which are identical for more than one size, shall have the same parts number.

1.06 IDENTIFICATION

A. Each equipment item shall be identified with a nameplate. The nameplate shall be engraved indicating the circuit number and equipment name with which it is associated. Equipment identification shall be in accordance with Section 16195, Electrical - Identification.

PART 2 – PRODUCTS

2.01 MANUFACTURERS

A. The equipment covered by this Specification is intended to be standard equipment of proven performance as manufactured by reputable concerns. Equipment shall be designed, constructed and installed in accordance with the best practices of the trade, and shall operate satisfactorily when installed as shown on the Drawings.

B. Switches shall be manufactured by Square D Company, Cutler-Hammer, General Electric Company, or equal.

2.02 DISCONNECT SWITCHES

A. Disconnect switches shall be heavy duty type and/or as specified in these Specifications. Switches shall be furnished and installed as shown on the Drawings and as required by the NEC. Handles shall be lockable.

B. Switches shall be NEMA Type HD, single throw, externally operated, fused or non fused as required. Switches of the poles, voltage, and ampere ratings shown shall be furnished in NEMA 1A (gasketed) enclosures in indoor dry areas, and in NEMA 4X Type 316 stainless steel enclosures for damp/wet indoor process areas. Enclosures for outdoor applications shall be NEMA 4X Type 316 stainless steel. Switches located in hazardous areas shall be suitable for the Class, Division, and Group to suit the application.

C. Disconnect switches shall be quick make, quick break and with an interlocked cover which cannot be opened when switch is in the "ON" position and capable of being locked in the "OPEN" position.

D. A complete set of fuses for all switches shall be furnished and installed as required. Time current characteristic curves of fuses serving motors or connected in series with circuit breakers shall be coordinated for proper operation. Fuses shall have voltage rating not less than the circuit voltage.

PART 3 – EXECUTION

3.01 INSTALLATION

A. All disconnect switches to be mounted five (5) feet above the floor, at the equipment height where appropriate, or where shown otherwise.

B. The CONTRACTOR shall furnish and install fuses of various types as required with the continuous ampere ratings as required or shown on the Drawings.

- - END OF SECTION - -

SECTION 16482 – REDUCED VOLTAGE SOLID STATE STARTER

PART 1 – GENERAL

1.01 THE REQUIREMENT

A. The Contractor shall furnish, install, connect, test and place in satisfactory operating condition all Reduced Voltage Solid State Starters (RVSSs) as specified herein and indicated on the Drawings.

B. Reference Sections:

1. 16050, Electrical General Provisions.

2. 17530, Level Control Panel (LCP).

1.02 TESTING

A. All tests shall be performed in accordance with the requirements of the General Conditions and Division 1. The following tests are required:

1. Field Tests

a. Field tests shall be performed in accordance with requirements specified in the General Conditions, Division 1, and Section 16000, Basic Electrical Requirements.

1.03 SUBMITTALS

A. In accordance with the procedures and requirements set forth in General Conditions and Section 01300, Submittals, the Contractor shall obtain from the equipment manufacturer and submit the following:

1. Shop Drawings

2. Programming Guides/Manuals

3. Operation and Maintenance Manuals

4. Spare Parts List

5. Special Tools List

6. Reports of Field Tests

B. Each submittal shall be identified by the applicable specification section.

1.04 SHOP DRAWINGS

A. Each submittal shall be complete in all respects, incorporating all information and data listed herein and all additional information required for evaluation of the proposed equipment's compliance with the Contract Documents.

B. Partial, incomplete, or illegible submittals will be returned to the Contractor without review for resubmittal.

C. Drawings submitted by the manufacturer shall be complete and documented to provide the City with operations and maintenance capabilities.

D. Shop drawings for each RVSS shall include but not be limited to:

1. Layout drawings of the RVSS system that include enclosure dimensions, access details, and weights.

2. Layout drawings of enclosures showing size, arrangement, color, and nameplates. Drawings shall include the physical arrangement of door mounted devices located on the RVSS enclosure. Sufficient detail shall be provided for locating conduit stub-ups. General "catalog data sheet" layout drawings which are not specific to the systems specified herein are not acceptable.

3. Custom schematic and interconnection wiring diagrams of all electrical work, including terminal blocks and identification numbers, wire numbers and wire colors. Standard schematics and wiring diagrams that are not custom created by the manufacturer for the variable frequency drives for this project are not acceptable.

4. Complete single line diagrams indicating all devices comprising the RVSS system including, but not limited to, circuit breakers, motor circuit protectors, contactors, meters, relays, timers, control devices, and other equipment comprising the complete system. Electrical ratings of all equipment and devices shall be clearly indicated on these single line diagrams.

5. Complete Bills of Material and catalog data sheets for all equipment and devices comprising the variable frequency drive system.

6. Confirmation of the spare parts requirements as specified herein.

7. Confirmation that one (1) copy of software shall be provided as specified herein.

E. The shop drawing information shall be completed and organized in such a way that the Engineer can determine if the requirements of these Specifications are being met. Copies of technical bulletins, technical data sheets from "Soft Cover" catalogs, and similar information which is "highlighted" or somehow identifies the specific equipment items the Contractor intends to provide are to provide are acceptable and shall be submitted.

F. Prior to completion and final acceptance of the project, the Contractor shall furnish and install "as-built" wiring diagrams for each RVSS starter. These final drawings shall be plastic laminated and securely placed inside the RVSS enclosure door and included in the O&M manuals.

G. Product Data shall include, but not be limited to:

1. Functional diagrams that identify major system functional blocks and interfaces.

2. Special requirements or restrictions of the motor-load combination that may result from operation on the RVSS system.

H. Programming Guides and Manuals shall be submitted. If the RVSS system require computer software or configuration, provide copies of all programming guides/manuals. Flow charts and listings of software developed shall be submitted to the Engineer.

1.05 OPERATIONS AND MAINTENANCE MANUALS

A. The Contractor shall submit operation and maintenance manuals in accordance with the procedures and requirements set forth in the General Conditions, Section 01300, Submittals and Section 11000, Equipment - General Provisions.

1.06 TOOLS, SUPPLIES, AND SPARE PARTS

A. The RVSSs and accessories shall be furnished with all spare parts as recommended by the equipment manufacturer. Three spare fuses of each type shall be furnished by the Contractor to the City.

1.07 SERVICES OF MANUFACTURER'S REPRESENTATIVE

A. The Contractor shall provide the services of a qualified manufacturer's technical representative who shall adequately supervise the installation and testing of all equipment furnished under this Contract and instruct the Contractor's personnel and the City's operating personnel in its maintenance and operation as outlined in the General Conditions, Division 1, and Section 11000, Equipment - General Provisions. The services of the manufacturer's representative shall be provided for a period of not less than as follows:

1. One trip of one (1) working day during installation and start-up/configuration of the equipment.

B. Any additional time required to achieve successful installation and operation shall be at the expense of the Contractor. The manufacturer's representative shall sign in and out at the office of the Resident representative on each day he is at the project.

1.08 WARRANTY

A. Contractor shall warrant that the material and workmanship of all components and the operation of the variable frequency drive system and auxiliary equipment is in accordance with the latest design practices and meets the requirements of this Specification.

B. Warranty work shall include, but not be limited to, the following:

1. Replace components found to be faulty and make changes in equipment arrangement or adjustments necessary to meet the equipment or functional requirements or this Specification.

2. Warranty shall include system rewiring and substitution and rebuilt or additional equipment required during trial operation or subsequent operation of the unit during the period of this warranty.

3. Warranty shall be in effect for a period of 24 months following final acceptance of the system.

PART 2 – PRODUCTS

2.01 REDUCED VOLTAGE SOLID STATE STARTER

A. The solid-state reduced-voltage starter (RVSS) shall be UL and CSA listed. The solid-state reduced-voltage starter shall be an integrated unit with power SCRs, logic board, an integral paralleling bypass contactor, and electronic overload relay enclosed in a single molded housing. The starter shall meet all applicable requirements of this Section and other sections in this Division.

B. The RVSS shall be suitable for continuous operation at 115% of its continuous ampere rating. To ensure that pump/motor load starting torque requirements are met, the Contractor shall furnish the starter of the next higher maximum continuous current rating than otherwise required based on the full load ampere rating of the motor.

C. The Contractor is fully responsible for the review of the mechanical specifications to determine specified motor speed, horsepower and full load amperes. This information is available in the applicable mechanical specifications for each piece of equipment (e.g. Blowers).

D. The RVSS shall be suitable for the following environmental conditions:

1. Operating Temperature: 0-50 degrees C (ambient temperature)

   0-40 degrees C (enclosed)

2. Humidity: 0-95 percent non-condensing.

3. Altitude: up to 3,300 feet.

E. The RVSS shall be suitable for operation on a 480VAC, 3-phase, 60 Hertz system.

F. The SCR-based power section shall consist of six (6) back-to-back SCRs and shall be rated for a minimum peak inverse voltage rating of 1400 volts PIV. Units using triacs or SCR/diode combinations are not acceptable. Resistor/capacitor snubber networks shall be used to prevent false firing of SCRs due to dv/dt effects.

G. The integral paralleling run bypass contactor shall energize when the motor reaches full speed and close/open under one (1) times motor current. The paralleling run bypass contactor shall utilize an intelligent coil controller to limit contact bounce and optimize coil voltage during varying system conditions. The coil shall have a lifetime warranty.

H. The starter shall be provided with electronic overload protection as standard and shall be based on an inverse time-current algorithm. Overload protection shall be capable of being disabled during ramp start for long acceleration loads. Overload protection shall be adjustable and shall have a motor full load ampere adjustment from 30 to 100% of the maximum continuous ampere rating of the starter. The starter shall have selectable overload class setting of 5, 10, 20 or 30. The starter shall be capable of either an electronic or mechanical reset after a fault. Units using bimetal or eutectic alloy overload relays are not acceptable. Over-temperature protection (on heat sink) shall be standard.

I. The starter shall provide protection against improper line-side phase rotation as standard. The starter shall stop the motor load if a line-side phase rotation other than A-B-C exists. This feature shall be capable of being disabled.

J. The starter shall provide protection against a phase loss or unbalance condition as standard. The starter shall stop the motor load if a 50% current differential between any two phases is encountered. This feature may be disabled via a DIP switch on the device keypad.

K. The starter shall provide protection against a motor stall condition as standard. This feature may be disabled via a DIP switch on the device keypad.

L. The starter shall provide protection against a motor jam condition as standard. This feature may be disabled via a DIP switch on the device keypad.

M. The starter shall be provided with a form C normally open (NO), normally closed (NC) contact that shall change state when a fault condition exists. The contacts shall be rated 60 VA (resistive load) and 20 VA (inductive load). In addition, an LED display on the device keypad shall indicate the type of fault (Over-temperature, Phase Loss, Jam, Stall, Phase Reversal, and Overload).

N. The starter shall be provided with an unpowered internal “Run” contact rated for 24VDC or 120 VAC operation.

O. The following control function adjustments on the device keypad shall be provided:

1. Selectable Torque Ramp Start or Current Limit Start

2. Adjustable Kick Start Time, 0-2 seconds

3. Adjustable Kick Start torque, 0-90%

4. Adjustable Ramp Start Time; 0.5-180 seconds

5. Adjustable Initial Starting Ramp Torque; 0-100%

6. Adjustable Smooth Stop Ramp Time; 0-60 seconds.

P. Enclosed units shall include a motor circuit protector (MCP) for short-circuit protection and quick disconnect means. A 120 VAC control power transformer, fused on both the primary and secondary sides, shall be provided for the control power source. Input and output isolation contactors shall be furnished as indicated on the Drawings.

Q. RVSSs integrated into motor control center structures shall meet the enclosure requirements for motor control centers as specified herein.

R. The complete starter assembly shall be rated per UL 508D for a withstand rating of 35 kAIC rms. Starters enclosed in motor control centers shall be of the same manufacturer.

S. The following accessories and spare parts shall be provided for each starter:

1. Surge suppressor mounted on the line side of the starter to clip the input line voltage.

2. Lug kits for both the line and load side of the starter.

3. One (1) user's manual for each frame size of starter.

4. One (1) spare 24VDC power supply for each size used.

T. The reduced voltage solid state starter shall be the Altistart 22 with integral bypass as manufactured by Schneider Electric (SquareD).

PART 3 – EXECUTION

3.01 INSTALLATION

A. The RVSS shall be installed as shown on the Drawings and in accordance with the manufacturer's installation instructions.

- - END OF SECTION - -

SECTION 17530 – LEVEL CONTROL PANEL (LCP)

PART 1 – GENERAL

1.01 WORK INCLUDED

A. Description: This section covers the specification of the pump and wet well level control panel system at City of Hialeah Pump Station 012.

B. The Contractor shall furnish all labor, materials and equipment required for a complete installation of the system described in this section.

1. The duplex pump level control panel shall be by Curry Controls Company. Phone: (863) 646-5781 Chuck Maxwell.

2. Curry Controls shall update the base station screens to reflect new station status signals.

3. The manufacturer of the system shall take single source, unit responsibility for every component contained within the manufacturer's pump control system.

4. The manufacturer of the system shall take responsibility for the proper operation and sequencing of the pump controls.

5. The scope of work includes providing a LCP with a Motorola RTU latest model currently used with client for controlling the following minimum functions: The LCP shall control the operation of the two sewage lift pumps. Controlling inputs shall include pump status signals and wet well level float signals. Additionally, the LCP shall interface with the RTU system and provide remote I/O status and remote control signals as indicated on the drawings and specifications.

C. Design Data:

1. The level control system shall control the starting, stopping, and alternation of (2) sewage lift station pumps and associated alarms.

D. B. Reference Sections:

1. 16050, Electrical General Provisions.

2. 17530, Level Control Panel (LCP).

1.02 QUALITY ASSURANCE

A. Manufacturer's Experience:

1. The manufacturer of the control system shall be certified by Underwriters Laboratories (UL) as being a UL 508 listed systems panel manufacture certified to install a serialized label for quality control and insurance liability considerations.

1.03 SUBMITTAL REQUIREMENTS:

A. Record Documents:

1. "AS-BUILT DRAWINGS: 8 sets of all documents are to be supplied and marked in colored ink as depicting "As-built" conditions. These are to include any field modifications made by the authorized start-up personnel during installation, start-up, or testing.

2. Operation and Maintenance Manuals: the control system manufacturer shall supply a complete and detailed operation and maintenance manual specifically prepared for this system. A "typical" general O & M type manual will not be accepted. The O & M manual shall include the following information as a minimum requirement.

a) System operating instructions with details on the appropriate meaning and action to take under each alarm condition.

b) Maintenance instructions including schedules of routine maintenance.

c) Recommended spare parts list.

1.04 WARRANTIES

A. All guarantees implied or stated by the control system manufacturer shall be passed in full force to the owner. The manufacturer of the control system shall warrant all components in the system for unit responsibility purposes.

B. Components: All components in the specified control system shall carry, at a minimum, a comprehensive, parts and labor, twelve (12) month guarantee against defects in workmanship and material from the date of final inspection and CITY acceptance, not to exceed 18 months from the date of shipment from the manufacturer's facility.

PART 2 – PRODUCTS

2.01 EQUIPMENT DESCRIPTION

A. The Control Panel shall be designed and built as integrated, prewired equipment. It shall control the operation of two pumps, via float controlled levels in the wet well.

B. The control panel shall include but not be limited to the following: (see drawings for more details)

1. Nema 4X-316 Stainless Steel enclosure

2. All hardware shall be stainless steel.

3. Main and generator circuit breakers

4. Reduced Voltage Solid State (RVSS) Motor starters (controllers) See Section 16482 for details.

5. Auxiliary circuit breakers
6. Fuses
7. Lightning and surge protection
8. Phase detectors for each motor
9. Control power transformer
10. Pilot lamps shall be High Brightness LED type
11. Elapsed time hour meters for each pump
12. Elapsed time hour meter to total when two pumps run simultaneously
13. Hand switches
14. Relays
15. Terminal strips
16. Wire gutters
17. Alarm bell and light
18. Generator Outlet – Coordinate with CITY for model
19. Indicator lamp test pushbutton or push to test lamps
20. Float control with momentary override switches for testing.
21. Plus all other devices shown on the plans.
22. Intrinsically safe barriers for float switches
23. SCADA equipment – including radio, power supplies, antenna, antenna cable, antenna lead-in surge protection

C. The above equipment shall be properly sized and configured for the station. See drawings for electrical load requirements.

D. Circuit breakers shall be thermal magnetic, molded case, Square D, type FA, or approved equal.

E. Reduced Voltage Solid State (RVSS) Motor controllers shall be sized as indicated on the Plans, with overloads to match the supplied motors. Two sets of N.O/N.C. spare contacts shall be provided in the sewage pump starter. RVSS to be Square D. See Specification 16482.

F. All external wiring shall terminate in a terminal block, Square D type G class 9080, or approved equal. Terminal block shall be laid out and numbered as shown on the drawings.

G. Relays shall be socket-mounted for ease of replacement, Square D type K Class 8501, or approved equal.

H. Lamps (High Brightness LED type), push buttons and switches shall be heavy duty oil-tight/watertight, Square D, type K Class 9001, or approved equal.

I. Elapsed time meters shall be provided to indicate total running time of each sewage pump and both pumps simultaneously in "hours" and "tenths of hours". Meters shall be Eagle Signal Series HK or approved equal.

2.02 SUSPENDED FLOAT SWITCHES

A. Level switches of the direct acting float-operated design shall be comprised of a sealed, approximately 5 inch diameter plastic casing float, containing mercury switches and flexibly supported by means of a heavy neoprene or PVC jacket, with three conductor cable a minimum of 30 feet in length. Unless otherwise specified, media specific gravity is .95 to 1.05. Mercury switches shall be one normally open and one normally closed 5A-115V AC capacity. Float hangers and supports shall be provided as shown on the installation detail drawings.

B. Mercury Float Switch shall have molybdenum contacts sealed in a double-walled float of plastic material resistant to inorganic salt solutions, alkalis and mineral acids.

C. The Electrical Cable shall be PVC type STO #18 conductors. Cable lengths shall be field verified prior to ordering.

D. Switch shall be Flygt, Anchor Scientific or approved equal.

2.03 LIGHTNING AND SURGE SUPPRESSION

A. Lightning Arrestor shall be a 3-pole; 650 volt thyrite secondary arrestor approved for use in U.L. approved panels. Lightning Protection shall be an Innovative Technology model AP- 2 77 1480 or approved equal.

B. Surge Capacitor shall be a 3-pole, 650 volt, 1.0 mfd. capacitor approved for use in U.L. approved panels. It shall be a DELTA -CA603, or approved equal.

C. Provide separate NEMA.4X-316 stainless steel enclosure if above lightning & surge equipment are not installed in level control panel.

2.04 DRY TYPE TRANSFORMERS

A. Control voltage not to exceed 120V nominal.

B. Control power transformers (CPT) shall be mounted inside of the enclosure.

C. Over-current protection shall be supplied on both the line and load sides. Line protection for all step-down transformers shall use properly sized thermal magnetic circuit breakers only. Fuses will not be acceptable.

D. Transformers to be sized for a minimum of 30% extra capacity under full load conditions. Minimum size shall be 1 KVA.

E. One secondary line shall be grounded.

2.05 ENCLOSURE

A. All components shall be mounted in one enclosure. All annunciation and control devices will be mounted on the enclosure doors, which completely isolate the operator from all voltages exceeding 120 VAC.

B. Enclosure shall be manufactured by Electromate Enclosure Company, Hoffman, or approved equal.

C. There shall be no controls mounted on the exterior panel door. LCP dead front panel mounted controls / Indicators unique to each station lift pump shall be provided. All indicator lamps shall be high output LED type lamps. The following minimum devices shall be installed on the LCP:

1. Alarm Reset pushbutton – On dead front

2. Alarm Horn – Exterior of LCP

3. Alarm Silence Button – Exterior of LCP

4. Alarm Strobe Light – Exterior of LCP

5. Portable Generator Connection – Exterior of LCP

6. Phase Monitor Alarm Light – On dead front

7. High Level / All Pumps On Float/Alarm – On dead front

8. Low Level Float/Alarm – On dead front

D. Provide form-C dry contacts for each of the following conditions, these alarm signals shall go to the SCADA system and also local control panel indicators.

a. High Level Alarm

b. Low Level Alarm

c. Pump Failure Alarm from each pump

d. LCP Intrusion with override

e. Loss of utility power

f. Running

2.06 EQUIPMENT IDENTIFICATION

A. Identify all electrical equipment in accordance with these specifications.

B. All identification labels, within the enclosure and on outside of enclosure, shall be engraved black on white phenolic.

C. Provide screw-in type engraved nameplates to identify all individually mounted push buttons, rocker switches, lights, meters, disconnect switches, circuit breakers, motor starters, transformers, relays, fuses, phase monitors, surge arrestors, and any other equipment for which identification is required for eventual service or replacement. This includes the appropriate equipment within the cabinet. Embossed tape is not acceptable.

PART 3 – EXECUTION

3.01 FIELD INSTALLATION AND START-UP

A. The CONTRACTOR shall provide O&M manuals available on site at all times once startup and testing commences. Changes to these O&M manuals shall be kept onsite with a copy of the O&M manual. After final testing and acceptance, the O&M manuals shall be updated with the final configurations and drawings.

B. The CONTRACTOR shall include in his bid the services of a factory trained representative for whatever period of time, assuming a minimum of 1 trip required for each of the following items: installation inspection, start-up and testing, and plant personnel training in the proper maintenance and operation of the system.

C. The Contractor shall coordinate with the CITY during all startup and testing activities. The City will supply personnel to monitor and or assist the factory start-up crew.

D. Prior to final approval, the manufacturer shall submit a letter certifying that the installation has been tested and functions as per the plans and specifications.

- - END OF SECTION - -

SECTION 17560 - TRANSIENT VOLTAGE SURGE SUPPRESSION DEVICES

PART 1 – GENERAL

1.01 THE REQUIREMENT

A. Requirement:

1. CONTRACTOR shall provide all labor, materials, equipment and incidentals as shown, specified and required to furnish and install signal isolators, intrinsically safe (IS) barriers and surge protective devices (SPDs) in the control panels and on field devices as required herein and shown on the drawings.

2. Provide surge protection devices to protect field instruments and equipment from the effects of transient surges caused by lightning and other electrical sources.

3. Signal isolators shall be installed on all analog signals that originate from field instruments.

4. Intrinsically safe barriers shall be installed to interface with field devices that are located in UL Class 1, Division 1 or 2 classified areas.

5. SPDs shall be installed at the following locations:

   a. On 120 VAC, 60Hz power connections to control panels.

   b. On all analog signals at the control panel as the first point of entry to the panel. Include surge protection at 24 VDC loop powered field instruments for wiring distances greater than 75 feet from the control panel. Include surge protection on all four-wire, 120 VAC field instruments.

   c. On all discrete signals that have portions of interconnecting wiring located outside of protected buildings.

   d. On all copper data lines that have portions of interconnecting wiring located outside of protected buildings

1.02 QUALITY ASSURANCE

A. Standards, Codes and Regulations:

1. Surge protective devices and the installation and interconnection of the devices shall comply with applicable provisions of the following standards, codes and regulations:

   a. National Fire Protection Association 79, Annex “D” Standards, (NFPA).

   b. National Electrical Code, (NEC).

   c. National Electrical Manufacturer's Association Standards, (NEMA).

   d. UL 1449 Fourth Edition, Standard for Safety Surge Protective Devices (SPDs).

   e. UL 497B, Protectors for Data Communications and Fire-Alarm circuits.

f. International Electrotechnical Commission (IEC).

g. Institute of Electrical and Electronics Engineers (IEEE).

h. State and Local code requirements.

i. Where any conflict arises between codes or standards, the more stringent requirement shall apply.

1.03 GENERAL INFORMATION AND DESCRIPTION

A. All surge protectors of each type provided under this Contract shall be furnished by a single manufacturer.

PART 2 – PRODUCTS

2.01 SIGNAL ISOLATORS

A. General: The signal isolator shall be capable of accepting a voltage or amperage input and delivering an electrically isolated voltage/4-20 mA DC outputs. Provide isolation according to EN 61010.

B. Performance Requirements:

1. Max. transmission error: less than 0.1% of final value.

2. Response delay setting: 0 to 10 sec, adjustable.

3. Signal input: accept 0-10 VDC or 0-20 mA signal, configurable range via software.

4. Isolation: Three way isolation rated at 3 kV.

C. Construction Features:

1. Configuration: Configure device through DIP switches or software through a connection to a laptop. Provide all software and programming cables as necessary for configuration.

2. Pluggable screw connection terminals for ease of access to the terminations without removing device from DIN rail. Terminals accept 12 – 24 AWG wire.

3. Mounting: DIN-rail mountable.

4. Operating Temperature: -40°C to 70°C.

5. Power Supply: Nominal of 24 VDC, range of 9.6 VDC – 30 VDC. Device can be powered directly through screw connections on device or through a Power Terminal Block via DIN rail connector.

6. Accessories:

a. DIN rail connector for connecting devices. Provide one for every two devices in the panel.

b. Power Terminal Block for distributing power to the device through the DIN rail connector. Provide minimum of one per panel or as required for number of devices.

c. Fault monitoring module to monitor up to 115 devices connected through DIN rail connector. Module shall have SPDT dry contact output rated at 3 A at 30 VDC to signal in event of fault on one of the devices.

D. Products and Manufacturers: Provide one of the following:

1. Phoenix Contact MINI MCR-2 Series.

2. Or approved equal.

2.02 SIGNAL SPLITTERS

A. General: The signal splitter shall be capable of accepting a voltage or amperage input and delivering two electrically isolated 4-20 mA DC outputs. Provide isolation according to EN 61010.

B. Performance Requirements:

1. Max. transmission error: less than 0.1% of final value.

2. Response delay setting: 0 to 10 sec, adjustable.

3. Signal input: accept 0-10 VDC or 0-20 mA signal, configurable range via software.

4. Isolation: Three way isolation rated at 3 kV.

C. Construction Features:

1. Configuration: Configure device through DIP switches or software through a connection to a laptop. Provide all software and programming cables as necessary for configuration.

2. Pluggable screw connection terminals for ease of access to the terminations without removing device from DIN rail. Terminals accept 12 – 24 AWG wire.

3. Mounting: DIN-rail mountable.

4. Operating Temperature: -40°C to 70°C.

5. Power Supply: Nominal of 24 VDC, range of 9.6 VDC – 30 VDC. Device can be powered directly through screw connections on device or through a Power Terminal Block via DIN rail connector.

6. Accessories:

a. DIN rail connector for connecting devices. Provide one for every two devices in the panel.

b. Power Terminal Block for distributing power to the device through the DIN rail connector. Provide minimum of one per panel or as required for number of devices.

c. Fault monitoring module to monitor up to 115 devices connected through DIN rail connector. Module shall have SPDT dry contact output rated at 3 A at 30 VDC to signal in event of fault on one of the devices.

D. Products and Manufacturers: Provide one of the following:

1. Phoenix Contact MINI MCR-2 Series.

2. Or approved equal.

2.03 INTRINSICALLY SAFE BARRIERS

A. General: The intrinsically safe barrier shall be capable of accepting a contact located in a hazardous area and delivering an electrically isolated contact output. Barrier shall be SIL 2 rated.

B. Required Features:

1. Input signal: Floating switch contacts, NAMUR prox sensors

2. Ambient Temperature Range: -20°C to 60°C.

3. Ambient Humidity Range: 10 to 95 percent, non-condensing.

4. Supply voltage: 19.2 VDC – 30 VDC, nominally 24 VDC.

5. Signal output: Hard gold-plated, switching 2 amps at 250 VAC.

6. DIN-Rail Mountable, 0.5 inch width.

7. Power can be supplied to multiple isolators through foot element or T-connector.

C. Products and Manufacturers: Provide one of the following:

1. Phoenix Contact MACX Series.

2. Or approved equal.

2.04 SPD – 24 VDC ANALOG – CONTROL PANEL

A. General: Surge protection device (SPD) at the control panel for 24 VDC power connections to field instruments. SPD shall be DIN rail mountable, pluggable, modular and testable. Removal of the SPD plug for testing shall not disrupt operation of protected circuits.

B. Features:

1. Suppression: Gas-filled surge arrester and silicon avalanche diode capable of protecting one or two analog signals.

2. Maximum Continuous Operating Voltage: 30 VDC.

3. Nominal current In: 1000 mA.

4. Protection level Up (core-core): ≤ 55 V (500 V/250 A).

5. Protection level Up (core-ground): ≤ 600 V (1 kV/500 A).

6. Resistance per path: 2.2 ohms.

7. Nominal discharge surge current (8/20 µs): 10 kA.

8. Total surge current (8/20 µs): 20 kA.

9. Response time (core-core): ≤ 5 ns

10. Response time (core-ground): ≤ 100 ns

11. Status of SPD monitored through LED indicator on SPD and through head-end monitoring module.

12. Operating temperature of -40 ºC to 70 ºC.

C. Monitoring Module Features:

1. Communicate status and provide power to SPD LEDs via TBUS connector on DIN rail.

2. Nominal Operating Voltage: 28 VDC (20 VDC – 30 VDC).

3. Provide two NC contacts for status of overload and performance limit reached of connected SPDs.

4. Capable of monitoring status of 28 SPDs.

5. Provide ON/OFF switch for SPD LED lights.

D. Product and manufacturer:

1. Phoenix Contact, PLUGTRAB PT-IQ 1X2 OR 2X2.

2. Or approved equal.

2.05 SPD – DISCRETE SURGE PROTECTION – 24 VDC

A. General: Surge protection at the control panel for 24 VDC discrete signal connections. SPD shall be DIN rail mountable, pluggable, modular and testable. Removal of the SPD plug for testing shall not disrupt operation of protected circuits.

B. Features:

1. Suppression: Gas-filled surge arrester and silicon avalanche diode capable of monitoring two or four discrete signals with a common reference potential.

2. Maximum Continuous Operating Voltage: 30 VDC.

3. Nominal current In: 1000 mA.

4. Protection level Up (core-ground): ≤ 55 V (25 A)

5. Resistance per path: 1.2 ohms.

6. Nominal discharge surge current (8/20 µs): 10 kA.

7. Total surge current (8/20 µs): 20 kA.

8. Response time (core-ground): ≤ 1 ns

9. Operating temperature of -40 ºC to 70 ºC.

10. Status of SPD monitored through LED indicator on SPD and through head-end monitoring module.

C. Monitoring Module Features:

1. Communicate status and provide power to SPD LEDs via TBUS connector on DIN rail.

2. Nominal Operating Voltage: 28 VDC (20 VDC – 30 VDC).

3. Provide two NC contacts for status of overload and performance limit reached of connected SPDs.

4. Capable of monitoring status of 28 SPDs.

5. Provide ON/OFF switch for SPD LED lights.

D. Product and manufacturer:

1. Phoenix Contact, PLUGTRAB PT-IQ 2 X 1 OR 4 X 1.

2. Or approved equal.

2.06 SPD – DISCRETE SURGE PROTECTION – 120 VAC

A. General: Surge protection at the control panel for 120 VAC discrete signal connections. SPD shall be DIN-rail mountable, pluggable, modular and able to be tested. Removal of the SPD plug for testing shall not disrupt operation of protected circuits.

B. Features:

1. Suppression: Metal oxide varistors.

2. Maximum Continuous Operating Voltage: 150 VAC.

3. Nominal current In: 26 amps.

4. Protection level Up (Core-ground): ≤ 600 V.

5. Nominal discharge surge current (8/20 µs): 2.5 kA.

6. Total surge current (8/20 µs): 5 kA.

7. Response time (core-ground): ≤ 25 ns

8. Operating temperature of -40 ºC to 85 ºC.

C. Product and manufacturer:

1. Phoenix Contact, MCR-PLUGTRAB PT 2x1-VA-120.

2. Or approved equal.

2.07 SPD – 24 VDC POWER/ANALOG – FIELD DEVICE

A. General: Surge protection at the field device for 24 VDC power connections.

B. Features:

1. Suppression: Gas-filled surge arrester and silicon avalanche diode.

2. Maximum Continuous Operating Voltage: 36 VDC.

3. Nominal current In: 450 mA.

4. Protection level Up (core-core): ≤65 V.

5. Protection level Up (core-ground): ≤ 1.2 kV (C2- 10 kV/5 kA).

6. Nominal discharge surge current (8/20 µs) (core-ground): 10 kA.

7. Total surge current (8/20 µs): 20 kA.

8. Core to core response time: < 1 ns.

9. Core to ground response time: < 100 ns

10. Operating temperature of -25 ºC to 80 ºC.

11. Material and mounting: High grade steel with ½ inch NPT.

C. Product and manufacturer:

1. Phoenix Contact, SURGETRAB, S-PT-EX-24DC.

2. Or approved equal.

2.08 SPD – 120 VAC POWER/24 VDC SIGNAL – FIELD DEVICE

A. General: Surge protection at the field device to protect the 120 VAC power and 24 VDC analog signal. Surge protection to be provided in a NEMA 4X enclosure. SPD shall be DIN-rail mountable, pluggable, modular and able to be tested. Removal of the SPD plug for testing shall not disrupt operation of protected circuits

B. 120 VAC Power Surge Features:

1. Suppression: Metal oxide varistors (MOVs) and gas-filled surge arresters.
2. Maximum Continuous Operating Voltage: 150V.
3. Nominal load current In: 26 A.
4. Protection level Up (L-N): 620 V.
5. Protection level Up (L-PE): 850 V.
6. Protection level Up (N-PE): 850 V.
7. Nominal discharge surge current (8/20 µs): 2.5 kA.
8. Response time: < 25 ns (L-N)
9. Operating temperature of -40 ºC to 85 ºC.

C. 24 VDC Signal Surge Features:

1. Suppression: Gas-filled surge arrester and silicon avalanche diode.
2. Maximum Continuous Operating Voltage: 28 VDC.
3. Nominal current In: 450 mA.
4. Protection level Up (core-core): ≤ 70 V.
5. Protection level Up (core-ground): ≤ 450 V.
6. Resistance per path: 2.2 ohms.
7. Nominal discharge surge current (8/20 µs): 10 kA.
8. Total surge current (8/20 µs): 20 kA.
9. Response time (core-core): ≤1 ns
10. Response time (core-ground): ≤ 100 ns
11. Operating temperature of -40 ºC to 85 ºC.

D. Product and manufacturer:

1. Phoenix Contact, BOXTRAB – BXT-N4X.
2. Or approved equal.

2.09 SPARE PARTS

A. Provide the following spare parts:

1. One per five of each type of surge protective device; minimum of one of each type of surge protective device.

2. One per five of each type of signal isolator and IS barrier; minimum of one of each type of surge protective device.

PART 3 – EXECUTION

3.01 INSTALLATION

A. Install signal isolators downstream of SPDs.

B. Connect and ground in accordance with surge protection device manufacturers instructions. SPDs shall use a separate path to building ground; the equipment safety ground is not to be used as a transient ground path.

C. SPDs shall be installed as close as practical to the protected equipment, panel, or switchboards to minimize connecting wire lead lengths.

D. The installation shall follow the SPD manufacturer's recommended installation practices and comply with all applicable codes.

- - END OF SECTION - -

SECTION 17600 - UNPOWERED INSTRUMENTS, GENERAL

PART 1 – GENERAL

1.01 THE REQUIREMENT

A. The Instrumentation SUBCONTRACTOR shall furnish, install, test and place in operation process instrumentation (flow elements, pressure switches, etc.) as scheduled herein together with all signal converters, transmitters, isolators, amplifiers, etc. to interface all instrumentation, panels, controls and process equipment control panels with the process controls as shown on the Drawings and as specified. The CONTRACTOR may elect to install primary elements (flowmeters, etc.) on process lines provided that the Instrumentation SUBCONTRACTOR provides full on site supervision during installation. Mounting of associated transmitters, indicators, power supplies, brackets and appurtenances shall be provided as specified herein and shown on the Drawings.

B. It is the intent of this Specification and the Contract Documents that all process taps, isolation valves, nipples, penetrations, embedded instrumentation supports, conduit, wiring, terminations, and the installation of process instrumentation on process lines shall be provided under this Contract. The Instrumentation SUBCONTRACTOR shall supervise installation of equipment provided under this Division where installation is provided by others.

C. Tappings and connections for primary process sensors shall be sized to suit each individual installation and the requirements of the instrument served. It is the CONTRACTOR's responsibility to ensure that the location, supports, orientation and dimensions of the connections and tappings for instrumentation furnished under this Division are such as to provide the proper bracing, the required accuracy of measurement, protection of the sensor from accidental damage and accessibility for maintenance while the plant is in operation. Isolation valves shall be provided at all process taps.

1.02 RELATED WORK SPECIFIED ELSEWHERE

A. Section 17000 - Control System Scope and General Requirements

B. Section 17500 – Cabinets and Panels

C. Section 17700 - Powered Instruments, General

D. Unpowered instruments furnished with mechanical equipment shall be furnished, installed, tested and calibrated as specified elsewhere in the Contract Documents.

1.03 QUALITY ASSURANCE

A. ISA Standards and Practices for Instrumentation latest edition shall apply.

1.04 TOOLS, SUPPLIES AND SPARE PARTS

A. The Instrumentation SUBCONTRACTOR shall provide spare parts as specified in individual instrument specification sections.

PART 2 – PRODUCTS

2.01 GENERAL

A. Unless otherwise specified, instruments shall be provided with enclosures to suit specified environmental conditions. Field-mounted devices shall be rugged and mounted on walls or pipe stanchions.

PART 3 – EXECUTION

3.01 INSTALLATION

A. Equipment shall be located so that it is accessible for operation and maintenance. The Instrumentation SUBCONTRACTOR shall examine the Drawings and Shop Drawings for various items of equipment in order to determine the best arrangement for the work as a whole, and shall supervise the installation of process instrumentation supplied under this Division.

B. Field equipment shall be wall mounted or mounted on two inch diameter aluminum pipe stands welded to a 10 inch square 1/2 inch thick aluminum base plate unless shown adjacent to a wall or otherwise noted. Instruments attached directly to concrete shall be spaced out from the mounting surface not less than 1/2 inch by use of phenolic spacers. Expansion anchors in walls shall be used for securing equipment or wall supports to concrete surfaces. Unless otherwise noted, field instruments shall be mounted between 48 and 60 inches above the floor or work platform.

C. Embedded pipe supports and sleeves shall be Schedule 40, Type 316 stainless steel pipe, ASA B 36.19, with stainless steel blind flange for equipment mounting as shown on the Drawings.

D. Materials for miscellaneous mounting brackets and supports shall be 316 stainless steel construction.

E. Pipe stands, miscellaneous mounting brackets and supports shall comply with the requirements of Division 5 of the specifications.

3.02 ADJUSTMENT AND CLEANING

A. The Instrumentation SUBCONTRACTOR shall comply with the requirements of Division 1 of these Specifications and all instrumentation and control system tests, inspection, and calibration requirements for all instrumentation and controls provided under this Contract and specified herein. The ENGINEER, or his designated representative(s), reserve the right to witness any test, inspection, calibration or start up activity. Acceptance by the ENGINEER of any plan, report or documentation relating to any testing or commissioning activity specified herein shall not relieve the CONTRACTOR of his responsibility for meeting all specified requirements.

B. The SUBCONTRACTOR shall provide the services of factory trained technicians, tools and equipment to field calibrate, test, inspect and adjust each instrument to its specified performance requirement in accordance with manufacturer's specifications and instructions. Any instrument which fails to meet any contract requirements, or any

published manufacturer performance specification for functional and operational parameters, shall be repaired or replaced, at the discretion of the ENGINEER, at no cost to the OWNER. The CONTRACTOR shall bear all costs and provide all personnel, equipment and materials necessary to implement all installation tests and inspection activities for equipment specified herein.

C. At least 60 days before the anticipated initiation of installation testing, the CONTRACTOR shall submit to the ENGINEER a detailed description, in duplicate, of the installation tests to be conducted to demonstrate the correct operation of the instrumentation and control system.

-- END OF SECTION --

SECTION 17650 - PRESSURE GAUGES

PART 1 – GENERAL

1.01 THE REQUIREMENT

A. CONTRACTOR shall provide all labor, materials, equipment and incidentals as shown, specified and required to furnish and install signal isolators, intrinsically safe (IS) barriers and surge protective devices (SPDs) in the control panels and on field devices as required herein and shown on the drawings.

1.02 RELATED WORK SPECIFIED ELSEWHERE

A. Section 17000 – Control and Information System Scope and General Requirements

B. Section 17600 – Unpowered Instruments, General

C. Section 17698 – Instrumentation Accessories

PART 2 – PRODUCTS

2.01 PRESSURE GAUGES

A. All gauges shall be designed in accordance with the ASME B40.1 entitled, "Gauges, Pressure, Indicating Dial Type - Elastic Element".

B. All gauges shall be direct reading type. Snubbers shall be provided on all gauges. Gauge full-scale pressure range shall be selected such that the maximum operating pressure shall not exceed the approximately 75% of the full-scale range.

C. Provide an all welded construction 316L stainless steel diaphragm seal

D. Features

1. Mounting: ½” NPT, lower stem mount type
2. Accuracy: 0.5% full scale
3. Case: Solid front, black phenolic material
4. Dial: White background and black letters
5. Glass: Shatterproof
6. Blow-out protection: Back
7. Pressure element: stainless steel bourdon tube
8. Movement: Stainless steel, Teflon coated pinion gear and segment
9. Gaskets: Buna-N

E. Liquid-filled or equivalent mechanically-damped gauges shall be used if the gauges are installed with pumps, or where gauges are subjected to vibrations or pulsation. Filling fluid shall be silicone unless oxidizing agents such as sodium hypochlorite are present, where halocarbon shall be used.

F. Gauge size shall be 2" for line sizes up to 3" and 4½" for line sizes of 4" or greater.

G. Diaphragm seals shall be furnished in accordance with the requirements specified under Section 17698 - Instrumentation and Control System Accessories.

H. The complete gauge assembly and appurtenances shall be fully assembled and tested prior to field mounting. See Drawing I03 for gauge piping assembly.

I. Pressure gauges shall be Ashcroft Duragauge Model 1279 with Model 511 Diaphragm Seal, equivalent by Ametek, or equal.

PART 3 – EXECUTION

3.01 REQUIREMENTS

A. Refer to Section 17600, Part 3.

B. Refer to Section 17910 “Instrument List” for pressure ranges.

- - END OF SECTION - -

SECTION 17700 - POWERED INSTRUMENTS, GENERAL

PART 1 – GENERAL

1.01 THE REQUIREMENT

A. The instrumentation subcontractor shall furnish, install, test and place in operation powered process instrumentation (flow elements, level transmitters, etc.) as scheduled herein together with all signal converters, transmitters, isolators, amplifiers, etc. to interface all instrumentation, panels, controls and process equipment control panels with the process control system as shown on the Drawings and as specified. Powered instruments are those instruments that require power (120 VAC or 24 VDC loop power) to operate. The CONTRACTOR may elect to install primary elements (flowmeters, etc.) on process lines provided that the instrumentation subcontractor provides full on site supervision during installation. Mounting of associated transmitters, indicators, power supplies, brackets and appurtenances shall be provided as specified herein and shown on the Drawings.

B. It is the intent of the Contract Documents that all process taps, isolation valves, nipples, penetrations, embedded instrumentation supports, conduit, wiring, terminations, and the installation of process instrumentation on process lines shall be provided under this Contract. The instrumentation subcontractor shall supervise installation of equipment provided under this Division where installation is provided by others.

C. Tapping and connections for primary process sensors shall be sized to suit each individual installation and the requirements of the instrument served. The CONTRACTOR shall ensure that the location, supports, orientation and dimensions of the connections and tapping for instrumentation furnished under this Division are such as to provide the proper bracing, the required accuracy of measurement, protection of the sensor from accidental damage, and accessibility for maintenance while the plant is in operation. Isolation valves shall be provided at all process taps.

1.02 RELATED WORK SPECIFIED ELSEWHERE

A. Section 17000 – Control and Information System Scope and General Requirements

B. Section 17500 – Enclosures, General

C. Section 17600 – Unpowered Instruments, General

D. Section 17698 – Instrumentation and Control System Accessories

E. Section 17800 – Analytical Instruments, General

F. Powered instruments furnished with mechanical equipment shall be furnished, installed, tested and calibrated as specified elsewhere in the Contract Documents.

1.03 TOOLS, SUPPLIES AND SPARE PARTS

A. Tools, supplies and spare parts shall be provided as specified in Section 17050.

B. In addition to the above requirements, the instrumentation subcontractor shall provide one remote handheld configuration device for communication with all "smart" instruments furnished under this Contract. The devices shall be capable of performing configuration, test, and format functions from anywhere on the 4 20 mA signal loop for a particular transmitter or by direct connection. The configuration device shall be Fischer & Porter Model 50HC1000, Rosemount Model 375, or equal.

PART 2 – PRODUCTS

2.01 GENERAL

A. All instrumentation supplied shall be the manufacturer's latest design. Unless otherwise specified, instruments shall be solid state, electronic, using enclosures to suit specified environmental conditions. Microprocessor-based equipment shall be supplied unless otherwise specified. All instruments shall be provided with mounting hardware and floor stands, wall brackets, or instrument racks as shown on the Drawings, or as required.

B. Equipment installed in a hazardous area shall meet Class, Group, and Division as shown on the Drawings, to comply with the National Electrical Code.

C. All field instrumentation for outdoor service shall be provided with enclosures which are suitable for outdoor service, as follows:

1. Where the manufacturer's enclosures are suitable for outdoor service, they shall be provided with instrument sunshades. Sunshades shall be Style E as manufactured by O'Brien Corporation, or equal. Where possible, these instruments shall be mounted in a north facing direction.

2. Where the manufacturer's standard enclosures are not suitable for outdoor service, instruments shall be mounted in Field Panels in accordance with Section 17520, Field Panels, or may be furnished with Vipak instrument field enclosures as manufactured by O'Brien Corporation, equivalent by Intertec, or equal. It shall not be necessary to provide the manufacturer's NEMA 4 or 4X enclosures for instruments that will be subsequently mounted in separate field panels.

D. All instruments shall return to accurate measurement without manual resetting upon restoration of power after a power failure.

E. Unless otherwise shown or specified, local indicators shall be provided for all instruments. Where instruments are located in inaccessible locations, local indicators shall be provided and shall be mounted as specified in Subsection 3.01 (B) herein. All indicator readouts shall be linear in process units. Readouts of 0 100% shall not be acceptable (except for speed and valve position). Isolated outputs shall be provided for all transmitters.

F. Unless otherwise specified, field instrument and power supply enclosures shall be 316 stainless steel, fiberglass or PVC coated copper-free cast aluminum NEMA 4X construction.

G. Where separate elements and transmitters are required, they shall be fully matched, and unless otherwise noted, installed adjacent to the sensor. Special cables or equipment shall be supplied by the associated equipment manufacturer.

H. Electronic equipment shall utilize printed circuitry and shall be coated (tropicalized) to prevent contamination by dust, moisture and fungus. Solid state components shall be conservatively rated for long term performance and dependability over ambient atmosphere fluctuations. Ambient conditions shall be -20 to 50 degrees C and 20 to 100 percent relative humidity, unless otherwise specified. Field mounted equipment and system components shall be designed for installation in dusty, humid, and corrosive service conditions.

I. All devices furnished hereunder shall be heavy duty type, designed for continuous industrial service. The system shall contain products of a single manufacturer, insofar as possible, and shall consist of equipment models that are currently in production. All equipment provided, where applicable, shall be of modular construction and shall be capable of field expansion.

J. All non-loop-powered instruments and equipment shall be designed to operate on a 60 Hz AC power source at a nominal 117 V, plus or minus 10 percent, except where specifically noted. All regulators and power supplies required for compliance with the above shall be provided. Where equipment requires voltage regulation, constant voltage transformers shall be supplied.

K. All analog transmitter and controller outputs shall be isolated, 4 20 milliamps into a load of 0 750 ohms, unless specifically noted otherwise. All switches shall have double pole, double throw contacts rated at a minimum of 600 VA, unless specified otherwise.

L. Materials and equipment used shall be UL approved wherever such approved equipment and materials are available.

PART 3 – EXECUTION

3.01 INSTALLATION

A. General

1. Equipment shall be located so that it is accessible for operation and maintenance. The instrumentation subcontractor shall examine the Drawings and shop drawings for various items of equipment in order to determine the best arrangement for the work as a whole, and shall supervise the installation of process instrumentation supplied under this Division.

2. Electrical work shall be performed in compliance with all applicable local codes and practices. Where the Contract Documents do not delineate precise installation procedures, API RP550 shall be used as a guide to installation procedures.

B. Equipment Mounting and Support

1. Field equipment shall be wall mounted or mounted on two inch diameter pipe stands welded to a 10 inch square by 1/2 inch thick base plate unless shown adjacent to a wall or otherwise noted. Materials of construction shall be aluminum or 316 stainless steel. Instruments attached directly to concrete shall be spaced out from the mounting surface not less than 1/2 inch by use of phenolic spacers. Expansion anchors in walls shall be used for securing equipment or wall supports to concrete

surfaces. Unless otherwise noted, field instruments shall be mounted between 48 and 60 inches above the floor or work platform.

2. Embedded pipe supports and sleeves shall be schedule 40, 316 stainless steel pipe, ASA B 36.19, with stainless steel blind flange for equipment mounting as shown on the Drawings.

3. Materials for miscellaneous mounting brackets and supports shall be 316 stainless steel construction.

4. Pipe stands, miscellaneous mounting brackets and supports shall comply with the requirements of Division 5 of the specifications.

5. Transmitters shall be oriented such that output indicators are readily visible.

C. Control and Signal Wiring

1. Electrical, control and signal wiring connections to transmitters and elements mounted on process piping or equipment shall be made through liquid tight flexible conduit. Conduit seals shall be provided where conduits enter all field instrument enclosures and all cabinetry housing electrical or electronic equipment.

3.02 ADJUSTMENT AND CLEANING

A. General

1. The instrumentation subcontractor shall comply with the requirements of Division 1 of these Specifications and all instrumentation and control system tests, inspection, and calibration requirements for all instrumentation and controls provided under this Contract and specified herein. The ENGINEER, or his designated representative(s), reserves the right to witness any test, inspection, calibration or start up activity. Acceptance by the ENGINEER of any plan, report or documentation relating to any testing or commissioning activity specified herein shall not relieve the CONTRACTOR of his responsibility for meeting all specified requirements.

2. The instrumentation subcontractor shall provide the services of factory trained technicians, tools and equipment to field calibrate, test, inspect and adjust each instrument to its specified performance requirement in accordance with manufacturer's specifications and instructions. Any instrument which fails to meet any Contract requirements, or any published manufacturer performance specification for functional and operational parameters, shall be repaired or replaced, at the discretion of the ENGINEER, at no cost to the Owner. The CONTRACTOR shall bear all costs and provide all personnel, equipment and materials necessary to implement all installation tests and inspection activities for equipment specified herein.

3. At least 60 days before the anticipated initiation of installation testing, the CONTRACTOR shall submit to the ENGINEER a detailed description, of the installation tests to be conducted to demonstrate the correct operation of the instrumentation supplied hereunder.

- - - END OF SECTION - - -

SECTION 17701 - MAGNETIC FLOW METERS

PART 1 – GENERAL

1.01 THE REQUIREMENT

A. The CONTRACTOR shall furnish, test, install and place in satisfactory operation the magnetic flow meters, with all spare parts, accessories, and appurtenances as herein specified and as shown on the Drawings.

1.02 RELATED WORK SPECIFIED ELSEWHERE

A. Section 17000 – Control and Information System Scope and General Requirements

B. Section 17700 – Powered Instruments, General

1.03 TOOLS, SUPPLIES AND SPARE PARTS (NOT REQUIRED)

PART 2 – PRODUCTS

2.01 MAGNETIC FLOW METER SYSTEMS

A. Magnetic flow meter systems shall include a magnetic flow tube and a microprocessor-based "smart" transmitter that is capable of converting and transmitting a signal from the flow tube. Magnetic flow meters shall utilize the characterized field principle of electromagnetic induction, and shall produce DC signals directly proportional to the liquid flow rate.

B. Each meter shall be furnished with a stainless steel or carbon steel metering tube and carbon steel flanges with a neoprene liner as required by the application and/or as specified herein. Liner shall have a minimum thickness of 0.125 inches. The inside diameter of the liner shall be within 0.125 inches of the inside diameter of the adjoining pipe. Liner protectors shall be provided on all flow tubes.

C. The flow tube shall be provided with flush mounted electrodes. Ultrasonic electrode cleaning shall not be acceptable.

D. Grounding rings shall be provided for all meters.

E. All materials of construction for metallic wetted parts (electrodes, grounding rings, etc.) shall be minimum 316 stainless steel, but shall be compatible with the process fluid for each meter in accordance with the recommendations of the manufacturer.

F. Flow tube shall be rated for pressures up to 1.1 times the flange rating of adjacent piping. System shall be rated for ambient temperatures of 30 to +65 C.

G. Transmitter housings shall meet NEMA 4X requirements as a minimum. When meter and transmitter are located in classified explosion hazard areas, the meter and transmitter housings shall be selected with rating to meet the requirements for use in those areas. Non-metallic transmitter housings shall not be acceptable.

H. Flow tube shall be NEMA 6P (IP68) rated, fully submersible and buriable.

I. The transmitter shall provide pulsed DC coil drive current to the flow tube and shall convert the returning signal to a linear, isolated 4 20 mA DC signal. The transmitter shall utilize "smart" electronics and shall contain automatic, continuous zero correction, signal processing routines for noise rejection, and an integral LCD readout capable of displaying flow rate and totalized flow. The transmitter shall continuously run self-diagnostic routines and report errors via English language messages.

J. The transmitter's preamplifier input impedance shall be a minimum of 109-1011 ohms which shall make the system suited for the amplification of low-level input signals and capable of operation with a material build up on the electrodes.

K. The transmitter shall provide an automatic low flow cutoff below a user configurable low flow condition (0-10%). The transmitter's outputs shall also be capable of being forced to zero by an external contact operation.

L. Each flow tube shall be factory calibrated. The flow indicating transmitter shall have self-calibration and diagnostic capability coupled with fingerprinting technology, to determine the accuracy status of the flowmeter to within ±1 % of its original factory calibration. Manual calibration of the flow meter shall not be required. Meter configuration data shall be stored in non volatile memory in the transmitter.

M. Accuracy shall be 0.50% of rate over the flow velocity range of 0.3 to 10.0 m/s. Repeatability shall be 0.1% of rate; minimum turndown shall be 100:1. Minimum required liquid conductivity shall not be greater than 5 uS/cm. Maximum response time shall be adjustable between 1 and 100 seconds as a minimum. Transmitter ambient temperature operating limits shall be 10 to +50□C. Power supply shall be 115 VAC, 60 Hz.

N. Flow tubes shall be 150-lb flange mounted unless otherwise noted. The cables for interconnecting the meter and transmitter shall be furnished by the manufacturer. Transmitter shall be mounted integrally on flow tube, wall, or 2-inch pipe mounted as shown in the Drawings and/or as specified.

O. Magnetic flow meter systems shall be Water Master (with VeriMaster) as manufactured by ABB, or equal.

PART 3 – EXECUTION

3.01 REQUIREMENTS

A. Ground magnetic flow meter flow tubes and grounding rings in strict accordance with the manufacturer's recommendations.

B. Refer to Section 17700, Part 3, for further requirements.

- - END OF SECTION - -

SECTION 17761 - PRESSURE TRANSMITTERS

PART 1 – GENERAL

1.01 THE REQUIREMENT

A. The CONTRACTOR shall furnish, test, install and place in satisfactory operation the pressure transmitters, with all spare parts, accessories, and appurtenances as herein specified and as shown on the Drawings.

PART 2 – PRODUCTS

2.01 PRESSURE TRANSMITTERS

A. Pressure transmitters shall be of the 2-wire, general purpose type with integrated or screw on type flush process isolated diaphragm seal with synthetic oil fill. Diaphragm seal body shall be 316L stainless steel with a 1” NPT male, threaded process connection. Diaphragm seals shall be welded to the pressure transmitter by the manufacturer.

B. Transmitter casing shall be weatherproof and corrosion resistant NEMA 4X stainless steel construction with an integral manufacturer supplied signal cable or an integral electrical junction box.

C. Accuracy, including nonlinearity, hysteresis and repeatability errors shall be plus or minus 0.2 percent of factory calibrated span, zero based.

D. Output shall be linear isolated 4 20 milliamperes 24 VDC. Power supply shall be 24 VDC, two-wire design.

E. 4-20mA signal line surge suppressor shall be furnished with each pressure transmitter. The surge suppressor shall be manufactured by Phoenix Contact, or equal.

F. Environmental limits shall be a minimum 0 to 160 degrees Fahrenheit.

G. Each transmitter shall have a stainless steel tag with calibration data attached to body.

H. The pressure sensor shall be mechanically, electrically, and thermally isolated from the process and the environment, shall include an integral temperature compensation circuit.

I. Unless noted elsewhere, pressure range shall be 0-60 psi gauge pressure.

J. Pressure transmitters shall be Model 375 (375FB0100GLSVX40FT) as manufactured by Ametek, or model A2 with 330 diaphragm seal as manufactured by Ashcroft, or equal.

PART 3 – EXECUTION (NOT USED)

- - END OF SECTION - -

CITY OF HIALEAH

DEPARTMENT OF PUBLIC WORKS

PUMP STATION 12 UPGRADES

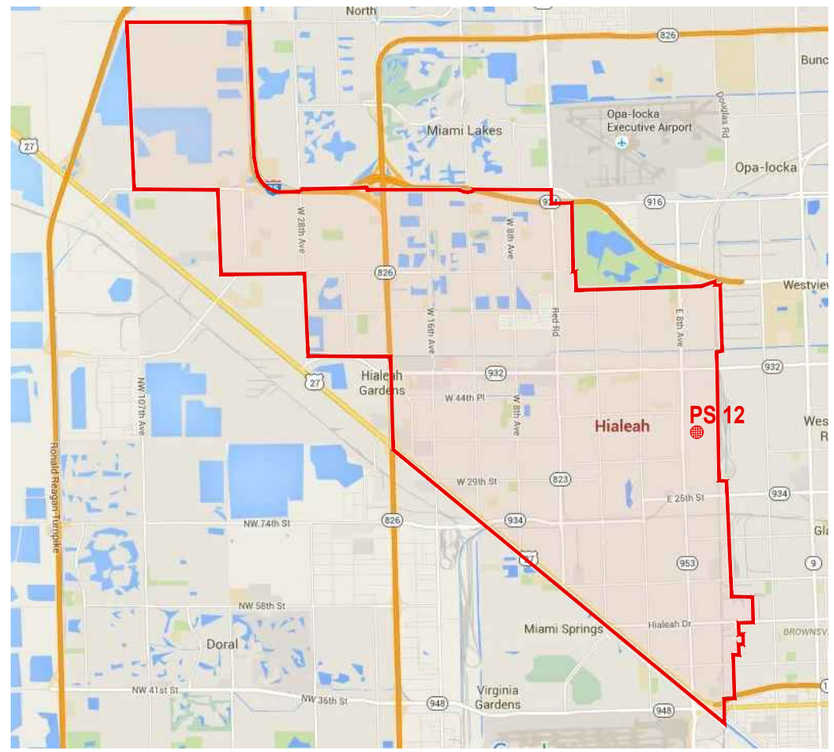

LEGEND	
———	LIMITS OF CITY
●	PROJECT LOCATION

LOCATION MAP

BID SET
MAY 2018

ARMANDO VIDAL, P.E.
Director

Hazen

CERTIFICATION OF AUTHORIZATION No.: 2771 .
999 PONCE DE LEON BOULEVARD, SUITE 1150
CORAL GABLES, FL. 33134
(305)443-4001

CITY COMMISSION

CARLOS HERNÁNDEZ	Mayor
LUIS GONZÁLEZ	Council President
KATHARINE CUE-FUENTE	Council Vice President
ISIS GARCÍA-MARTÍNEZ	Council Member
JOSÉ F. CARAGOL	Council Member
VIVIAN CASÁLS-MUNOZ	Council Member
LOURDES LOZANO	Council Member
PAUL B. HERNÁNDEZ	Council Member

SHEET NUMBER	SHEET TITLE	SHEET DESCRIPTION
GENERAL		
01	G-01	COVER SHEET AND LOCATION MAP
02	G-02	SYMBOLS AND ABREVIATIONS
CIVIL		
03	C-01	EXISTING/ PROPOSED SITE PLANS
04	C-02	CIVIL DETAILS
MECHANICAL		
05	M-01	DEMOLITION PLAN AND SECTION
06	M-02	MODIFICATION PLAN AND SECTION
07	M-03	MECHANICAL DETAILS
STRUCTURAL		
08	S-01	STRUCTURAL GENERAL NOTES
09	S-02	STRUCTURAL MODIFICATION PLAN AND SECTION
ELECTRICAL		
10	E-01	ELECTRICAL LEGEND
11	E-02	ELECTRICAL GENERAL NOTES
12	E-03	ELECTRICAL RISER DIAGRAMS
13	E-04	ELECTRICAL SCHEDULES, NOTES, AND DETAILS
14	E-05	ELECTRICAL DETAILS

TITLE SHEET AND LOCATION MAP
SHEET 01 OF 14
DRAWING No. G01

BID SET

SYMBOLS

- SOLENOID VALVE
- MOTOR OPERATED VALVE
- BALL VALVE
- BUTTERFLY VALVE/DAMPER
- DIAPHRAGM VALVE
- CHECK VALVE
- GATE VALVE
- PLUG VALVE
- THREE WAY VALVE
- PRESSURE REDUCING/RELIEF VALVE
- PRESSURE REGULATING VALVE
- HOSE BIBB (PLAN)
- HOSE BIBB (ELEVATION)
- REDUCER (SINGLE LINE)
- REDUCER (DOUBLE LINE)
- VENTURI METER
- MAGNETIC METER
- FLAME ARRESTER
- GAUGE
- UNION
- EXPANSION JOINT COUPLING
- HARNESSED EXPANSION JOINT COUPLING
- MECHANICAL COUPLING
- HARNESSED MECHANICAL COUPLING
- GROOVED COUPLING
- FLANGED JOINT
- MECHANICAL JOINT
- PUSH-ON JOINT
- THREADED JOINT
- WELDED JOINT
- PIPE SUPPORT
- FIRE HYDRANT
- MANHOLE
- SEALED MANHOLE
- EXISTING STRUCTURE OR UTILITY
- NEW STRUCTURE OR UTILITY-THIS CONTRACT
- EXISTING PIPELINE (DOUBLE LINE IF SCALE OF DRAWING PERMITS)
- NEW PIPELINE-THIS CONTRACT (DOUBLE LINE IF SCALE OF DRAWING PERMITS)
- SLUICE GATE
- SLIDE GATE
- STOP LOG

ABBREVIATIONS

VALVES, FITTINGS, ETC.

ARV	AIR RELIEF VALVE
BF	BLIND FLANGE
BFV	BUTTERFLY VALVE
BV	BALL VALVE
CLV	CHLORINE GAS VALVE UNDER VACUUM
CPLG	COUPLING
CV	CHECK VALVE
EXP. JT.	EXPANSION JOINT
FD	FLOOR DRAIN
FH	FIRE HYDRANT
FLG, F	FLANGE
FTG	FITTING
GV	GATE VALVE
HB	HOSE BIBB
HIC	HAND INDICATING CONTROL
LR	LONG RADIUS
MC	MECHANICAL COUPLING
MJ	MECHANICAL JOINT
NPT	NATIONAL PIPE THREAD
PE	PLAIN END
PO	PUSH ON
PRV	PRESSURE RELIEF VALVE
P.S.	PUMP STATION
PV	PLUG VALVE
RD	ROOF DRAIN
RJ	RESTRAINED JOINT
SOV	SOLENOID OPERATED VALVE
THD	THREADED
VAC	VACUUM

PIPING

CIP	CAST IRON PIPE
CMP	CORRUGATED METAL PIPE
CPLG, C	COUPLING
CU	COPPER
DIP	DUCTILE IRON PIPE
FM	FORCE MAIN
FRP	FIBERGLASS REINFORCED PIPE
GSP	GALVANIZED STEEL PIPE
HDPE	HIGH DENSITY POLYETHYLENE
IPS	IRON PIPE SIZE
PCCP	PRESTRESSED CONCRETE CYLINDER PIPE
PVC	POLYVINYLCHLORIDE
RCP	REINFORCED CONCRETE PIPE
RCPP	REINFORCED CONCRETE PRESSURE PIPE

GENERAL

A/C	AIR CONDITIONER
AB	ANCHOR BOLT
AIR	AIR SCOUR
AL, ALUM	ALUMINUM
∠	ANGLE
APPROX.	APPROXIMATE
ARCH.	ARCHITECTURAL
BD	BASIN DRAIN
BLDG	BUILDING
BLK.	BLOCK
BS	BACKWASH SUPPLY
BOTT	BOTTOM
B.P.	BID PACKAGE
BW	BACKWASH WASTE
CB	CATCH BASIN
CC	CENTER TO CENTER
CHK'D	CHECKERED
CHLOR, CL_2	CHLORINE
℄	CENTER LINE
CLR.	CLEAR
CO	CLEAN OUT
CO.	COMPANY
COL	COLUMN
CONC.	CONCRETE
CONST.	CONSTRUCTION
CONT.	CONTINUOUS
CONTR.	CONTRACTOR
D	DRAIN
DEC	DECANT
DET	DETAIL
DIA	DIAMETER
DIAG	DIAGONAL
DIG	DIGESTER
DIM	DIMENSION
DISCH	DISCHARGE
DN	DOWN
DWG	DRAWING
DWL.	DOWEL
EA	EACH
ECC	ECCENTRIC
EE	EACH END
EF	EACH FACE
EFF	EFFLUENT
EL, ELEV	ELEVATION
ELEC.	ELECTRIC
EQUIP	EQUIPMENT
EW	EACH WAY
EXH	EXHAUST
EXIST	EXISTING
EXP	EXPANSION
EXT	EXTERIOR
FE	FIRE EXTINGUISHER
FEFF	FILTER EFFLUENT
FIG	FIGURE
FIN	FINISH
FINFL	FILTER INFLUENT
FL	FLOOR
FM	FORCE MAIN (WASTEWATER)
FT	FOOT
FTG	FOOTING
FW	FILTERED WATER
GALV	GALVANIZED
GD	GRAVITY DRAIN
GR	GRADE
HIC	HAND INDICATING CONTROLLER
HORIZ	HORIZONTAL
HP	HIGH POINT
HWH	HOT WATER HEATER
HWL	HIGH WATER LEVEL
ID	INSIDE DIAMETER
IF	INSIDE FACE
INFL	INFLUENT
INJ	INJECTION
INSUL	INSULATION
INT	INTERIOR
INV	INVERT
IQ	IRRIGATION QUALITY
ISO	ISOLATION
JT, J	JOINT
LAT.	LATERIAL
LBS	POUNDS
LBS/FT	POUNDS PER FOOT
LG	LONG
LGTH	LENGTH
LN	LINE
LOC	LOCATION
LP	LOW POINT
L.P.	LIGHT POLE
LWL	LOW WATER LEVEL
MAX	MAXIMUM
M.B.	MAILBOX
MECH, M	MECHANICAL
MFGR	MANUFACTURER
MH	MANHOLE
MIN	MINIMUM
MO	MASONRY OPENING
NIC	NOT IN CONTRACT
No.	NUMBER
NTS	NOT TO SCALE
OC	ON CENTER
OD	OUTSIDE DIAMETER
OF	OUTSIDE FACE
OPNG	OPENING
P/L, ℙ	PROPERTY LINE
P.C.	POINT OF CURVATURE
PI	PRESSURE INDICATOR (GAUGE)
P.I.	POINT OF INTERSECTION
POT	POTABLE
PROP	PROPOSED
PSI	POUNDS PER SQUARE INCH
P.T.	POINT OF TANGENCY
PVT	PAVEMENT
PW	POTABLE WATER
R/W, ROW	RIGHT OF WAY
RAD, R	RADIUS
RAS	RETURN ACTIVATED SLUDGE
RECIR	RECIRCULATION
RED	REDUCER
REHAB	REHABILITATION
REINF	REINFORCING
REQ'D	REQUIRED
REST.	RESTRAINED
REV	REVISION
RJ	RESTRAINED JOINT
RJW	REJECT WATER
RW	REUSE WATER
SAN	SANITARY
SECT	SECTION
§	SECTION LINE
SHT	SHEET
SPEC	SPECIFICATION
SQ	SQUARE
S.S.	STAINLESS STEEL
STA	STATION
STD	STANDARD
STL	STEEL
STRUC	STRUCTURAL
SYMM	SYMMETRICAL
TBD	TO BE DETERMINED
TEMP	TEMPORARY
THK	THICK
TI	TEMPERATURE INDICATOR
TOC	TOP OF CONCRETE
TOS	TOP OF SLAB
TWAS	THICKENED WASTE ACTIVATED SLUDGE
TYP	TYPICAL
VERT	VERTICAL
VTR	VENT THROUGH ROOF
W	WIDE
W/	WITH
W/L	WATER LEVEL
W/MO	WITH MOTOR OPERATOR
W/O	WITH OUT
WAS	WASTE ACTIVATED SLUDGE
WTR	WATER
WWF	WELDED WIRE FABRIC

SECTION AND DETAIL IDENTIFICATION

SECTION IDENTIFICATION

(1) SECTION CUT ON DRAWING C-1:

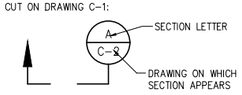

(2) ON DRAWING C-2 THIS SECTION IS IDENTIFIED AS:

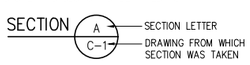

DETAIL IDENTIFICATION

(1) DETAIL CALL-OUT ON DRAWING C-1 AS:

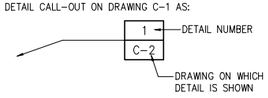

(2) ON DRAWING C-2 THIS DETAIL IDENTIFIED AS:

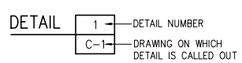

STANDARD DETAIL IDENTIFICATION

(1) DETAIL CALL-OUT ON PLAN OR SECTION:

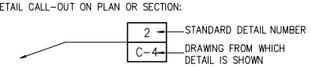

(2) ON DRAWING C-4 THIS DETAIL IDENTIFIED AS:

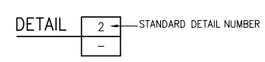

NOTE: IF PLAN AND SECTION (OR DETAIL CALL-OUT AND DETAIL) ARE SHOWN ON SAME DRAWING, DRAWING NUMBER IS REPLACED BY A DASH.

NOTES:

(1) ELECTRICAL SYMBOLS SHOWN ON ELECTRICAL SHEETS.

(2) FOR WELDING SYMBOLS USE AMERICAN WELDING SOCIETY STANDARD SYMBOLS. SEE AMERICAN INSTITUTE OF STEEL CONSTRUCTION MANUAL.

* DENOTES DIMENSIONS OR ELEVATIONS DEPENDENT ON EQUIPMENT SUPPLIED.

GENERAL NOTES:

1. LOCATIONS OF EXIST. UNDERGROUND PIPELINES AND UTILITIES WERE OBTAINED FROM AVAILABLE RECORDS. NEITHER THE OWNER NOR ENGINEER OF RECORD (EOR) ASSUMES ANY RESPONSIBILITY FOR PIPELINES OR UTILITIES NOT SHOWN OR NOT LOCATED WHERE SHOWN. CONTRACTOR SHALL FIELD VERIFY THE LOCATIONS AND ELEVATIONS OF ALL EXISTING PIPELINES AND UTILITIES BEFORE COMMENCING CONSTRUCTION WORK. CONTRACTOR SHALL PROVIDE THE OWNER WITH RECORD INFORMATION ON ALL FIELD VERIFICATIONS MEASUREMENTS AS SPECIFIED.
2. THE CONTRACTOR SHALL TAKE ALL PRECAUTIONARY MEASURES TO PROTECT EXISTING PIPELINES OR UTILITIES WHETHER SHOWN OR NOT.
3. THE CONTRACTOR SHALL NOTIFY THE ENGINEER IN ADVANCE OF MAKING ANY CONNECTION TO AN ACTIVE PIPELINE OR UTILITY SYSTEM.
4. ALL NEW PIPING AND FITTINGS SHALL BE DUCTILE IRON UNLESS OTHERWISE SPECIFIED. ALL BURIED IRON PIPE SHALL BE RESTRAINED (LOCKED) MECH. JOINTS.
5. THE CONTRACTOR SHALL BE RESPONSIBLE FOR ANY REPAIRS TO EXISTING STRUCTURE TO ALLOW THE PROPER INSTALLATION OF NEW PUMPS, MOTORS AND VALVES.
6. PRIOR TO CONSTRUCTION THE CONTRACTOR SHALL SUBMIT A WRITTEN METHOD AND SEQUENCE OF BY-PASS OPERATION DURING CONSTRUCTION. CONTRACTOR SHALL BE RESPONSIBLE FOR BYPASS PUMPING THE DESIGN FLOW WHILE STATION IS OUT OF SERVICE. BY-PASS OPERATION SHALL BE CONTINUOUSLY MANNED 24 HRS. PER DAY, 7 DAYS A WEEK. THE CONTRACTOR SHALL NOTE THAT THE PROPOSED WORK IS TO TAKE PLACE WITHIN A RESIDENTIAL AREA. THEREFORE, IT SHALL BE THE CONTRACTORS RESPONSIBILITY TO SELECT EQUIPMENT THAT WILL MINIMIZE NOISE PRODUCTION.
7. CONTRACTOR SHALL BE RESPONSIBLE FOR VERIFYING EXIST. PUMP STATION DIMENSIONS AND ORIENTATION.
8. ALL ELEVATIONS REFER TO NORTH AMERICAN VERTICAL DATUM OF 1929 (NAVD 1929), UNLESS OTHERWISE SPECIFIED.
9. ALL EXISTING EQUIPMENT TAGGED OR MARKED BY THE CITY SHALL REMAIN THE PROPERTY OF THE CITY HIALEAH AND SHALL BE DELIVERED TO THE CITY STORAGE AREA, OR AS DIRECTED BY THE ENGINEER.
10. THE CONTRACTOR IS RESPONSIBLE FOR DISPOSING OF UNSUITABLE MATERIAL IN A PROPER MANNER.
11. THE CONTRACTOR SHALL TAKE ALL PRECAUTIONARY MEASURES NECESSARY TO PROTECT EXISTING EQUIPMENT REMAINING IN PLACE FROM DAMAGE. ANY IMPROVEMENTS DAMAGED BY THE CONTRACTOR'S OPERATIONS SHALL BE EXPEDITIOUSLY REPAIRED OR RECONSTRUCTED TO THE ENGINEER'S SATISFACTION AT THE CONTRACTOR'S EXPENSE WITHOUT ADDITIONAL COMPENSATION.
12. THE CONTRACTOR SHALL BE RESPONSIBLE FOR TRAFFIC CONTROL DURING CONSTRUCTION AND FOR ANY NECESSARY TEMPORARY TRAFFIC DIVERSIONS DURING CONSTRUCTION. MOT SHALL BE SUBMITTED IF REQUIRED.
13. ANY EXISTING SODDED AREAS, FENCING, SIDEWALK OR ROAD PAVEMENT DISTURBED DURING CONSTRUCTION SHALL BE RESTORED TO EQUAL OR BETTER CONDITION.
14. ALL FASTENERS AND MISCELLANEOUS HARDWARE SHALL BE 316 STAINLESS STEEL AS DETAILED IN THE SPECS.
15. CONTRACTOR SHALL MAINTAIN PROPER ACCESS TO SITE AT ALL TIMES DURING CONSTRUCTION.
16. CONTRACTOR SHALL SUPPLY INSTALL AND REMOVE TEMPORARY FENCING.
17. CONTRACTOR SHALL VISIT SITE PRIOR TO CONSTRUCTION TO EXAMINE EXISTING FOLIAGE TO DETERMINE OF TRIMMING OR TREE REMOVAL WILL BE NECESSARY AND ACCOUNT FOR THIS WORK IF NECESSARY IN THE BID.
18. CLOSURE OF THE SIDEWALK WILL MOST LIKELY BE NECESSARY. AS SUCH, THE CONTRACTOR SHALL PROVIDE REQUIRED SIGNAGE AS WELL AS BARRICADES TO SAFE OFF WORK SITE AND REDIRECT PEDESTRIANS ACCORDINGLY.
19. IF CATCH BASINS OR ASSOCIATED STORM WATER SYSTEMS WITHIN THE VICINITY OF THE STATION WILL BE IMPACT BY CONSTRUCTION ACTIVITIES, THE CONTRACTOR SHALL EMPLOY SILT BARRIERS AS REQUIRED.
20. ANY CONFLICTS WITH PROPOSED WORK SHALL BE REPORTED IMMEDIATELY TO THE ENGINEER FOR DIRECTION CONCERNING PIPELINE/ EQUIPMENT LOCATION ADJUSTMENTS OR OBSTACLE RELOCATION.
21. ALL PERSONNEL WORKING ON THIS PROJECT SHALL BE CONFINED SPACE CERTIFIED.
22. ALL SIDE WALL SHALL BE REPLACED IN FULL FLAG SEGMENTS, PARTIAL FLAG REPLACEMENT SHALL NOT BE ACCEPTED.
23. ALL CURB AND GUTTER SHALL BE REPLACED IN FULL SEGMENT, SEGMENTS UNDER A FEET IN LENGTH SHALL NOT BE ACCEPTED.

DERM NOTES FOR WATER AND SEWER INSTALLATIONS

1. A HORIZONTAL DISTANCE OF AT LEAST 6 FEET, AND PREFERABLY 10 FEET (OUTSIDE TO OUTSIDE), SHALL BE MAINTAINED BETWEEN GRAVITY OR PRESSURE SEWER PIPES AND WATER PIPES. THE MINIMUM HORIZONTAL SEPARATION CAN BE REDUCED TO 3 FEET FOR VACUUM-TYPE SEWERS OR FOR GRAVITY SEWERS WHERE THE TOP OF THE SEWER PIPE IS AT LEAST 6 INCHES BELOW THE BOTTOM OF THE WATER PIPE. WHEN THE ABOVE SPECIFIED HORIZONTAL DISTANCE CRITERIA CANNOT BE MET DUE TO AN EXISTING UNDERGROUND FACILITY CONFLICT, SMALLER SEPARATIONS ARE ALLOWED IF ONE OF THE FOLLOWING IS MET:
   a) THE SEWER PIPES ARE DESIGNED AND CONSTRUCTED EQUAL TO THE WATER PIPE AND PRESSURE TESTED AT 150 PSI.
   b) THE SEWER IS ENCASED IN A WATERTIGHT CARRIER PIPE OR CONCRETE.
   c) THE TOP OF THE SEWER IS AT LEAST 18 INCHES BELOW THE BOTTOM OF THE WATER PIPE.
2. A VERTICAL DISTANCE OF AT LEAST 12 INCHES (OUTSIDE TO OUTSIDE) SHALL BE MAINTAINED BETWEEN ANY WATER AND SEWER MAINS WITH SEWER PIPES PREFERABLY CROSSING UNDER WATER MAINS. THE MINIMUM VERTICAL SEPARATION CAN BE REDUCED TO 6 INCHES FOR VACUUM-TYPE SEWERS OR FOR GRAVITY SEWERS WHERE THE SEWER PIPE IS BELOW THE WATER MAIN. THE CROSSING SHALL BE ARRANGED SO THAT ALL WATER MAIN JOINTS ARE AT LEAST 6 FEET FROM ALL JOINTS IN GRAVITY AND PRESSURE SEWER PIPES. THIS DISTANCE CAN BE REDUCED TO 3 FEET FOR VACUUM TYPE SEWERS. WHEN THE ABOVE SPECIFIED VERTICAL DISTANCE CRITERIA CANNOT BE MET DUE TO AN EXISTING UNDERGROUND FACILITY CONFLICT, SMALLER SEPARATIONS ARE ALLOWED IF ONE OF THE FOLLOWING IS MET:
   a) THE SEWER PIPES ARE DESIGNED AND CONSTRUCTED EQUAL TO THE WATER PIPE AND PRESSURE TESTED AT 150 PSI.
   b) THE SEWER IS ENCASED IN A WATERTIGHT CARRIER PIPE OR CONCRETE.
3. AIR RELEASE VALVES SHALL BE PROVIDED AT HIGH POINTS OF NEW FORCE MAIN SANITARY SEWERS.
4. GRAVITY SANITARY SEWERS CONSTRUCTED WITHIN A PUBLIC WELLFIELD PROTECTION AREA SHALL BE C-900 PVC OR DUCTILE IRON PIPE. THE MAXIMUM ALLOWABLE EXFILTRATION RATE OF GRAVITY SANITARY SEWERS CONSTRUCTED IN A PUBLIC WELLFIELD PROTECTION AREA SHALL BE:
   a) RESIDENTIAL LAND USES. F IFTY (50) GALLONS PER INCH PIPE DIAMETER PER MILE PER DAY, BASED ON A MINIMUM TWO (2) HOUR TEST HAVING A MINIMUM OF TWO (2) FEET OF POSITIVE HEAD ABOVE THE CROWN OF THE PIPE.
   b) NON-RESIDENTIAL LAND USES. TWENTY (20) GALLONS PER INCH PIPE DIAMETER PER MILE PER DAY, BASED ON A MINIMUM TWO (2) HOUR TEST HAVING A MINIMUM OF TWO (2) FEET OF POSITIVE HEAD ABOVE THE CROWN OF THE PIPE.
   c) ANY OBSERVED LEAKS OR ANY OBVIOUSLY DEFECTIVE JOINTS OR PIPES SHALL BE REPLACED EVEN WHEN THE TOTAL LEAKAGE IS BELOW THAT ALLOWED.
5. THE MAXIMUM ALLOWABLE EXFILTRATION RATE OF GRAVITY SANITARY SEWERS CONSTRUCTED OUTSIDE A PUBLIC WELLFIELD PROTECTION AREA SHALL BE ONE HUNDRED (100) GALLONS PER INCH PIPE DIAMETER PER MILE PER DAY, BASED ON A MINIMUM TWO (2) HOUR TEST HAVING A MINIMUM OF TWO (2) FEET OF POSITIVE HEAD ABOVE THE CROWN OF THE PIPE. ANY OBSERVED LEAKS OR ANY OBVIOUSLY DEFECTIVE JOINTS OR PIPES SHALL BE REPLACED EVEN WHEN THE TOTAL LEAKAGE IS BELOW THAT ALLOWED.
6. FORCEMAIN SANITARY SEWERS CONSTRUCTED WITHIN A PUBLIC WELLFIELD PROTECTION AREA SHALL BE DUCTILE IRON, C-900 PVC, HDPE OR REINFORCED CONCRETE PRESSURE SEWER PIPES.
7. THE MAXIMUM ALLOWABLE EXFILTRATION/LEAKAGE RATE OF FORCEMAIN SANITARY SEWERS SHALL BE:
   a) DUCTILE IRON, C-900 PVC, HDPE AND PVC PIPE. THE ALLOWABLE LEAKAGE RATE SPECIFIED IN AMERICAN WATER WORKS ASSOCIATION STANDARD (AWWAS) C600-82 AT A TEST PRESSURE OF 100 PSI FOR A DURATION OF NOT LESS THAN TWO (2) HOURS.
   b) REINFORCED CONCRETE PRESSURE PIPE. HALF (1/2) THE ALLOWABLE LEAKAGE RATE SPECIFIED IN AWWA C600-82 AT A TEST PRESSURE OF 100 PSI FOR A DURATION OF NOT LESS THAN TWO (2) HOURS.
   c) ANY OBSERVED LEAKS OR ANY OBVIOUSLY DEFECTIVE JOINTS OR PIPES SHALL BE REPLACED EVEN WHEN THE TOTAL LEAKAGE IS BELOW THAT ALLOWED.
8. THE CONTRACTOR SHALL VERIFY NATURE, DEPTH, AND CHARACTER OF EXISTING UNDERGROUND UTILITIES PRIOR TO START OF CONSTRUCTION.
9. IN NO CASE SHALL A CONTRACTOR INSTALL UTILITY PIPES, CONDUITS, CABLES, ETC. IN THE SAME TRENCH ABOVE AN EXISTING WATER OR SEWER PIPE EXCEPT WHERE THEY CROSS.
10. IF ANY AREA OF THE WORK SITE IS FOUND TO CONTAIN BURIED SOLID WASTE AND/OR GROUND OR GROUND WATER CONTAMINATION, THE FOLLOWING SHALL APPLY:
    a) ALL WORK IN THE AREA SHALL FOLLOW ALL APPLICABLE SAFETY REQUIREMENTS (E.G., OSHA, ETC.) AND NOTIFICATION MUST BE PROVIDED TO THE APPROPRIATE AGENCIES.
    b) IMMEDIATELY NOTIFY THE ENVIRONMENTAL MONITORING AND RESTORATION DIVISION (EMRD). THE EMRD CAN BE CONTACTED AT (305) 372-6700.
    c) IF CONTAMINATED SOILS AND/OR BURIED SOLID WASTE MATERIAL IS EXCAVATED DURING CONSTRUCTION, THEN THEY REQUIRE PROPER HANDLING AND DISPOSAL IN ACCORDANCE WITH THE LOCAL, STATE AND FEDERAL REGULATIONS. BE ADVISED THAT THE LANDFILL OWNER/OPERATOR IS THE FINAL AUTHORITY ON DISPOSAL AND MAY HAVE REQUIREMENTS BEYOND THOSE PROVIDED BY HEREIN. IF DISPOSAL WITHIN A MIAMI-DADE COUNTY OWNED LANDFILL (CLASS I LANDFILL) IS APPROPRIATE AND SELECTED, PLEASE CONTACT THE MIAMI-DADE COUNTY DEPARTMENT OF SOLID WASTE MANAGEMENT AT (305) 594-6666 FOR INFORMATION.
    d) THE REUSE OF CONTAMINATED SOILS THAT ARE NOT RETURNED TO THE ORIGINAL EXCAVATION REQUIRES PRIOR APPROVAL OF A SOIL MANAGEMENT PLAN FROM THE ENVIRONMENTAL MONITORING AND RESTORATION DIVISION. THE EMRD CAN BE CONTACTED AT (305) 372-6700.
11. PUMPS MUST COMPLY WITH THE NATIONAL ELECTRICAL CODE (NEC) REQUIREMENTS FOR CLASS I, GROUP D, DIVISION 1 LOCATIONS (EXPLOSION PROOF).
12. THE CONTRACTOR IS ADVISED THAT A TREE PERMIT MAY BE REQUIRED FOR TREE REMOVAL. PRIOR TO REMOVING ANY TREES, THE CONTRACTOR SHALL NOTIFY THE REGULATORY AND ECONOMIC RESOURCES DEPARTMENT AT (305) 372-6574 OR MUNICIPALITIES WITH JURISDICTION TO OBTAIN ANY REQUIRED PERMITS. THOSE TREES NOT INTERFERING WITH THE CONSTRUCTION SHALL BE PROTECTED IN-PLACE.
13. PLEASE NOTE THAT THE DEMOLITION, REMOVAL, AND/OR DISTURBANCE OF EXISTING UNDERGROUND UTILITIES THAT CONTAIN ASBESTOS- CEMENT PIPES (ACP) ARE SUBJECT TO THE PROVISIONS OF 40 CFR-61 SUBPART M. THEREFORE, PURSUANT TO THE PROVISIONS OF 40 CFR-61-145, A NOTICE OF DEMOLITION OR ASBESTOS RENOVATION FORM MUST BE FILED WITH THE AIR QUALITY MANAGEMENT DIVISION (AQMD) OF DERM, AT LEAST TEN (10) WORKING DAYS PRIOR TO STARTING OF ANY WORK. NOTE THAT THE BACKFILLING AND BURIAL OF CRUSHED ACP WOULD CAUSE THESE LOCATIONS TO BE CONSIDERED ACTIVE DISPOSAL SITES AND SUBJECT TO 40 CFR-61.154, AND 40 CFR-61.151 A YEAR AFTER PROJECT COMPLETION. EXISTING STANDARD OPERATING PROCEDURES, AS WELL AS APPLICABLE FEDERAL, STATE AND LOCAL REGULATORY CRITERIA, MUST BE FOLLOWED AND IMPLEMENTED TO MINIMIZE ANY POTENTIAL RELEASE OF FUGITIVE EMISSIONS, ESPECIALLY DURING PROJECT CONSTRUCTION ACTIVITIES. THE AQMD CAN BE CONTACTED VIA EMAIL AT ASBESTOS@MIAMIDADE.GOV OR 305-372-6925.

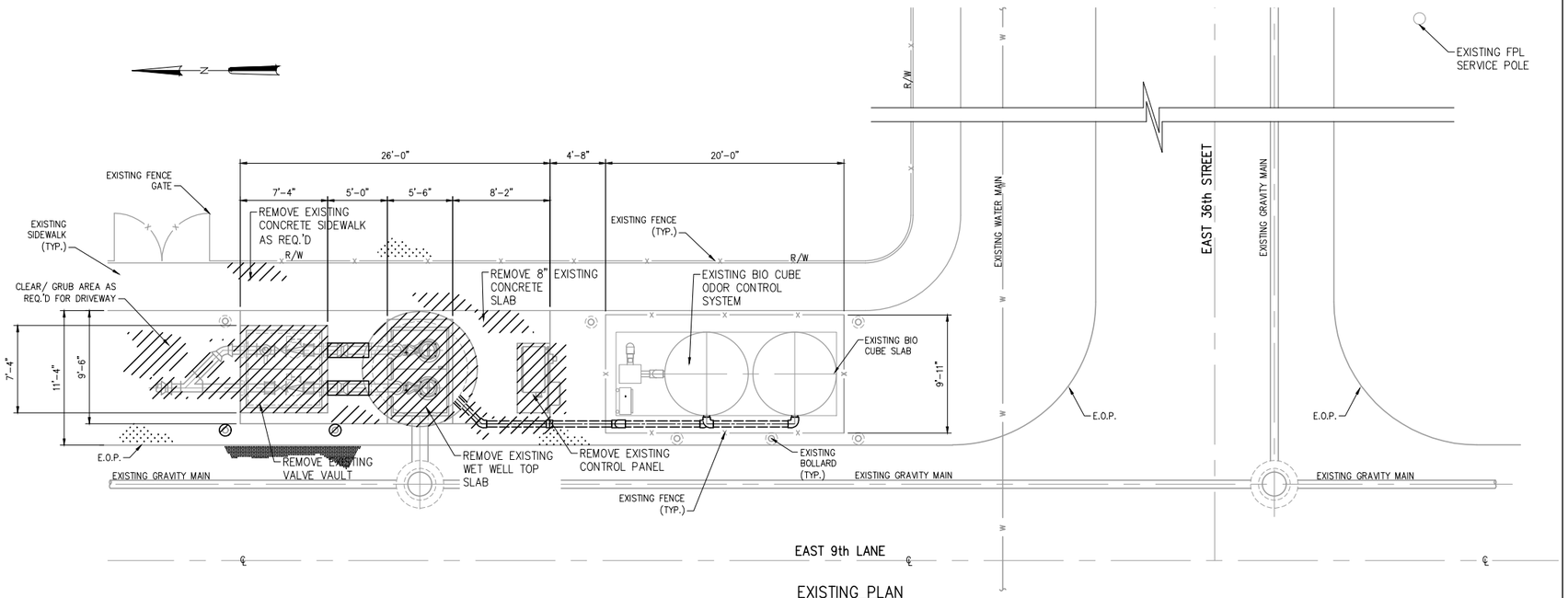

EXISTING PLAN

3/16"=1'-0"

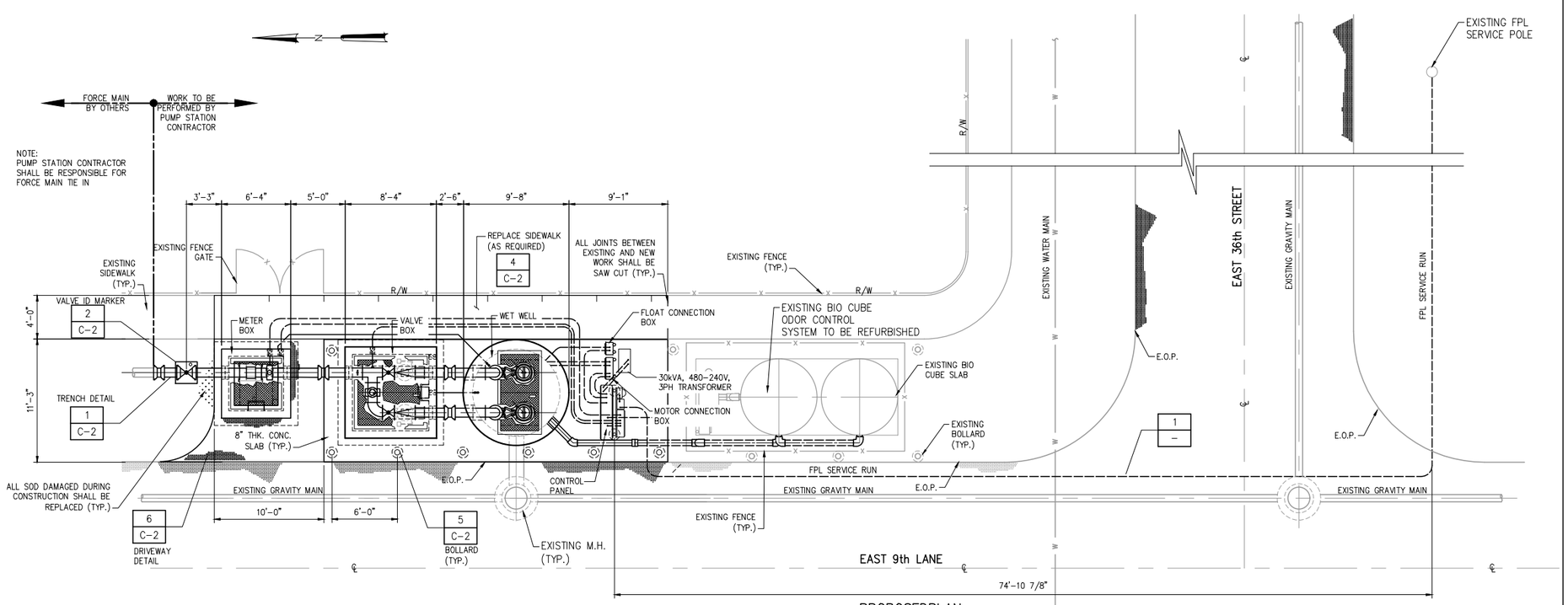

PROPOSEDPLAN

3/16"=1'-0"

BY-PASS PUMPING SYSTEM

1. PRIOR TO CONSTRUCTION THE CONTRACTOR SHALL SUBMIT A WRITTEN METHOD AND SEQUENCE OF BY-PASS OPERATION DURING CONSTRUCTION. CONTRACTOR SHALL BE RESPONSIBLE FOR BYPASS PUMPING THE DESIGN FLOW WHILE STATION IS OUT OF SERVICE. CONTRACTOR SHALL BE FULLY RESPONSIBLE TO MAINTAIN SEWER SERVICE 24 HOURS A DAY, 7 DAYS A WEEK FOR THE DURATION OF THE PROJECT.
2. ALL TIE-INS AND INTERCONNECTION TO THE EXISTING FORCE MAIN SYSTEM SHALL BE CONDUCTED DURING PERIODS OF LOW FLOW. CONTRACTOR SHALL PROVIDE PERSONNEL AND EQUIPMENT NECESSARY TO PERFORM THESE OPERATIONS WHETHER THEY ARE TO OCCUR DURING THE DAY OR NIGHT. SHUTDOWN DURATION OF THE STATION IS LIMITED AND SHALL BE COORDINATED WITH CITY.
3. A MINIMUM OF TWO BY-PASS PUMPING UNITS SHALL BE INSTALLED. ONE UNIT SHALL BE ELECTRICALLY OPERATED (PRIMARY) FROM TEMPORARY AC POWER, THE OTHER SHALL BE DIESEL OPERATED (SECONDARY) IN THE EVENT OF A POWER FAILURE. REGARDLESS OF THE NUMBER OF PUMPING UNITS UTILIZED IN THE BY-PASS SYSTEM, THE SECONDARY SYSTEM SHALL HAVE 100% FLOW CAPACITY REDUNDANCY.
4. BY-PASS PUMPING UNITS UTILIZED SHALL BE DESIGNED FOR CONTINUOUS OPERATION. PUMPING UNITS SHALL BE CAPABLE OF RUNNING DRY WITHOUT DAMAGE FOR EXTENDED PERIODS OF TIME.
5. AS THE PROPOSED BY-PASS SYSTEM WILL BE INSTALLED WITHIN A RESIDENTIAL AREA, THE CONTRACTOR SHALL TAKE THE NECESSARY PRECAUTIONS TO MAINTAIN BY-PASS PUMP NOISE LEVELS TO A MINIMUM. CONTRACTOR SHALL UTILIZE HOSPITAL GRADE SILENCERS, SOUND ATTENUATED ENCLOSURES OR A COMBINATION THEREOF FOR BOTH ELECTRIC AND DIESEL OPERATED PUMPS.
6. ALL BY-PASS PIPING SHALL BE LOCATED BELOW GRADE. ALL PIPING SHALL BE DUCTILE IRON. CONTRACTOR SHALL BACK FILL AND COMPACT EXCAVATION PER THE SPECIFICATIONS. COLD PATCH ASPHALT REPAIRS ARE NOT PERMISSIBLE.
7. ANY DAMAGE TO THE EXISTING ROADWAY, CURB AND GUTTER, SIDEWALK AND LANDSCAPING ALONG EAST 6Th AVENUE AS A RESULT OF THE INSTALLATION OF THE BY-PASS SYSTEM, SHALL BE REPAIRED BY THE CONTRACTOR AT NO ADDITIONAL COST TO THE CITY.
8. CONTRACTOR SHALL SUBMIT MAINTENANCE OF TRAFFIC (M.O.T.) PLANS TO CITY FOR REVIEW AND APPROVAL. CONTRACTOR SHALL NOTIFY CITY FIRE DEPARTMENT, POLICE DEPARTMENT AND SOLID WASTE DEPARTMENT OF ROAD CLOSURE DATES.
9. CONTRACTOR IS RESPONSIBLE FOR THE PROVISION OF SITE SECURITY FOR THE DURATION OF THE PROJECT.
10. BY-PASS PLAN SHOWN ABOVE IS FOR GRAPHICAL PURPOSES ONLY. CONTRACTOR IS REQUIRED TO SUBMIT ACTUAL BY-PASS PLAN AND SEQUENCE.
11. ANY SANITARY SEWER OVERFLOWS AS A RESULT OF THE CONTRACTOR'S NEGLIGENCE ASSOCIATED WITH THE MAINTENANCE OF THE BY-PASS SYSTEM SHALL BE THE RESPONSIBILITY OF THE CONTRACTOR INCLUDING, BUT NOT LIMITED ANY COSTS RELATED TO FINES AND DAMAGE TO PERSONAL PROPERTY

NOTES:

1. EXITING SITE PLAN AND EXISTING PLAN VIEW SHOWN FOR CLARITY. IT IS THE CONTRACTORS RESPONSIBILITY TO FIELD VERIFY ALL EXISTING CONDITIONS. NO ADDITIONAL PAYMENT SHALL BE MADE FOR DEVIATIONS DUE TO DISCREPANCIES BETWEEN EXISTING SITE CONDITIONS SHOWN ON CONTRACT DOCUMENTS AND ACTUAL FIELD CONDITIONS.
2. ELEVATION DATA PROVIDED HAS BEEN OBTAIN FROM AS-BUILT ELEVATIONS REFERENCING VERTICAL DATUM NAVD 1929.
3. ALL JOINTS BETWEEN EXISTING AND NEW WORK SHALL BE SAW CUT
4. CONTRACTOR SHALL PROVIDE CORE DRILL OPENING FOR CONDUITS AND DRAIN PIPE
5. FEMA FLOOD MAP 12086C0282L ZONE X

LEGEND	
	EXISTING
	DEMOLITION

3/16"=1'-0" 6 4 2 0 5'

NO.	DATE	ISSUED FOR	BY

DESIGNED CLK
DRAWN CLK
CHECKED JOH
PROJ. ENGR. CLK

CHRISTOPHER L. KISH P.E.
No. 55480

Hazen
999 Ponce de Leon Boulevard, Suite 1150
Coral Gables, FL 33134
Certificate of Authorization Number: 2771

SCALE AS NOTED

CONTRACT: –
CLIENTS PROJECT: –
ENGINEERS PROJECT: 46016-016
CAD REFERENCE: 46016-006-C01

CITY OF HIALEAH
DEPARTMENT OF PUBLIC WORK

CITY OF HIALEAH
PUMP STATION 12 UPGRADES

EXISTING/ PROPOSED SITE PLANS

DATE: MAY 2018
SHEET: 03 OF 14
DRAWING: C01

BID SET

PLOT DATE: 5/16/2018 8:35 AM BY: CKISH

XREFs= ..\Tblock\46016-006TB

File = O:\46016-000-HWD\46016-006\Drawings\PS 12 (2017)\New folder\Civil\46016-006-C01 Saved by ckish Save date = 5/16/2018 8:22 AM

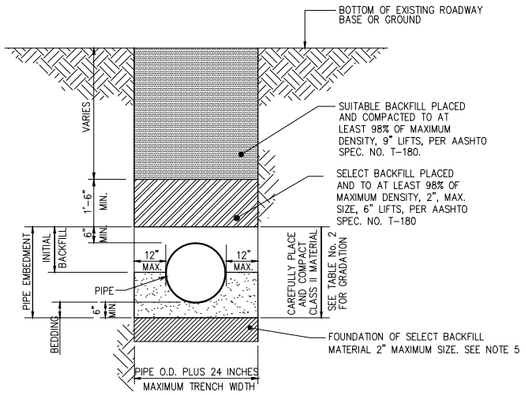

TABLE No. 2

SIEVE SIZE	PERCENT PASSING BY WEIGHT
3/4	100
3/8	85–100
#8	40–60
#30	5–30
#100	0–2

NOTES:

1. FOR EXCAVATION AND BACKFILL AROUND MANHOLES, APPURTENANCES, OR IN WATER, REFER TO PROVISIONS WITHIN THE SPECIFICATIONS.
2. CLASS II MATERIALS ARE WELL GRADED COURSE SANDS AND GRAVEL. SEE TABLE 2 FOR REQUIREMENTS.
3. WHERE REQUIRED, SHEETING AND SHORING SHALL BE IN ACCORDANCE WITH THE SPECIFICATIONS
4. UNSUITABLE SOILS ARE DEFINED IN THE SPECIFICATIONS AND SHALL INCLUDE FINE SANDS BELOW THE WATER TABLE.
5. EXTEND EXCAVATION AT LEAST 2 FEET DEEPER FOR FOUNDATION UNLESS SUITABLE MATERIAL IS FOUND AT A LESSER DEPTH. GREATER DEPTHS MAY BE REQUIRED FOR EXTREMELY POOR CONDITIONS.

TYPICAL TRENCH CONTRUCTION

DETAIL 1
NTS –

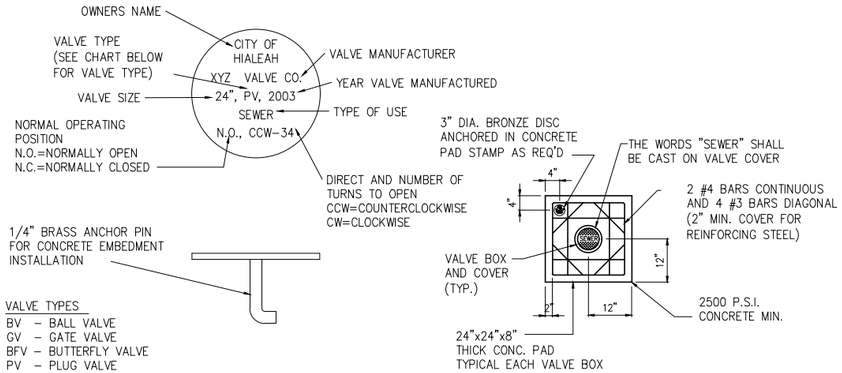

VALVE TYPES
BV – BALL VALVE
GV – GATE VALVE
BFV – BUTTERFLY VALVE
PV – PLUG VALVE

NOTES:
VALVE INFORMATION TO BE ENGRAVED INTO TOP SURFACE WITH 1/4" CAPITAL LETTERS.

ENTIRE MARKER TO BE COATED WITH CLEAR EPOXY TO PREVENT TARNISHING,

MARKERS SHALL BE MANUFACTURED BY WAGCO MARKERS, OR APPROVED EQUAL.

VALVE IDENTIFICATION MARKER DETAIL

DETAIL 2
NTS –

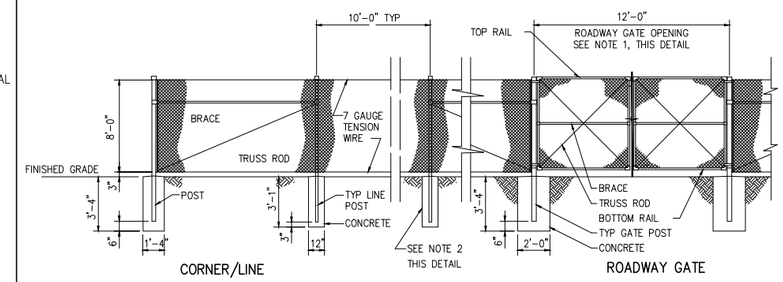

NOTES:

1. PROVIDE LATCHING DEVICES TO HOLD GATES IN OPEN POSITION.
2. IF ROCK IS ENCOUNTERED WHEN SETTING POSTS, DRILL HOLES 4 INCHES LARGER IN DIAMETER THAN POSTS AND BACKFILL TO GRADE WITH CLASS "B" CONCRETE.
3. FENCE SHALL HAVE GREEN VINYL COATING

CHAIN LINK FENCE

DETAIL 3
NTS –

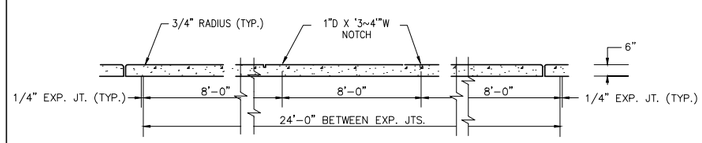

NOTE:

THE CONTRACTOR SHALL CONSTRUCT AN EXPANSION JOINT AT SPACINGS SHOWN ABOVE, AT THE END OF DAYS WORK, POINTS OF CURVATURE, AND AT ADJOINING STRUCTURES.

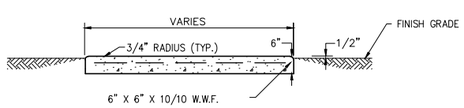

SIDEWALK EXPANSION JOINT

DETAIL 4
NTS –

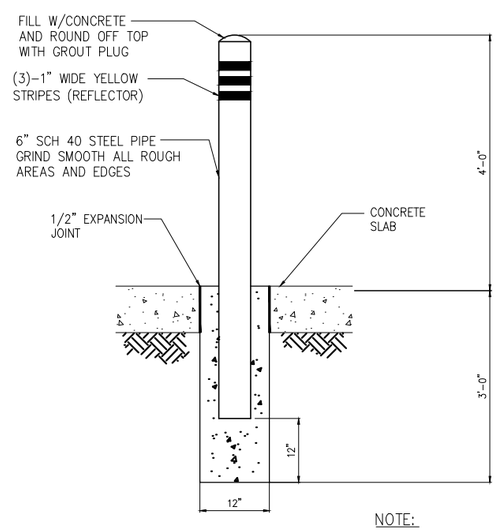

BOLLARD DETAIL

DETAIL 5
NTS –

NOTE:
THE CONTRACTOR SHALL COMPLETELY PAINT ALL STEEL BUMPER GUARD POSTS AFTER INSTALLATION WITH ZINC-RICH RUST INHIBITIVE TRAFFIC YELLOW PAINT.

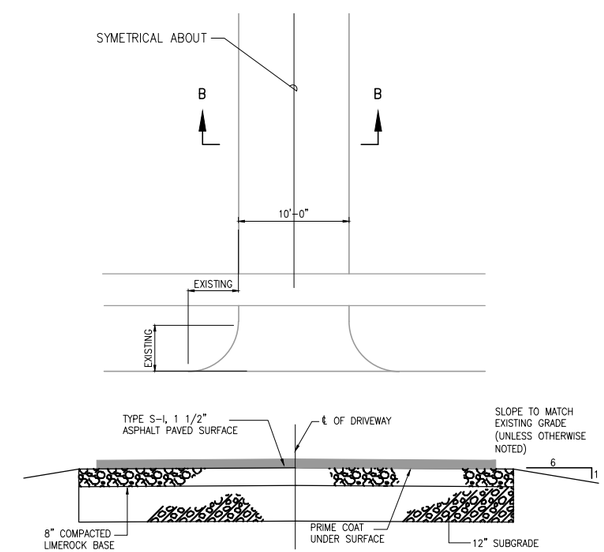

NOTE:
SLOPE ASPHALT TO ELEVATIONS SHOWN ON PAVING, GRADING AND DRAINAGE DRAWINGS.

DRIVEWAY

DETAIL 6
NTS –

NO.	DATE	ISSUED FOR	BY

DESIGNED CLK
DRAWN CLK
CHECKED JOH
PROJ. ENGR. CLK

CHRISTOPHER L. KISH P.E.
No. 55480

Hazen
999 Ponce de Leon Boulevard, Suite 1150
Coral Gables, FL 33134
Certificate of Authorization Number: 2771

SCALE NTS

CONTRACT: –
CLIENTS PROJECT: –
ENGINEERS PROJECT: 46016-016
CAD REFERENCE: 46016-006 C02

CITY OF HIALEAH
DEPARTMENT OF PUBLIC WORK

CITY OF HIALEAH
PUMP STATION 12 UPGRADES

CIVIL DETAILS

DATE: MAY 2018
SHEET: 04 OF 14
DRAWING: C02

BID SET

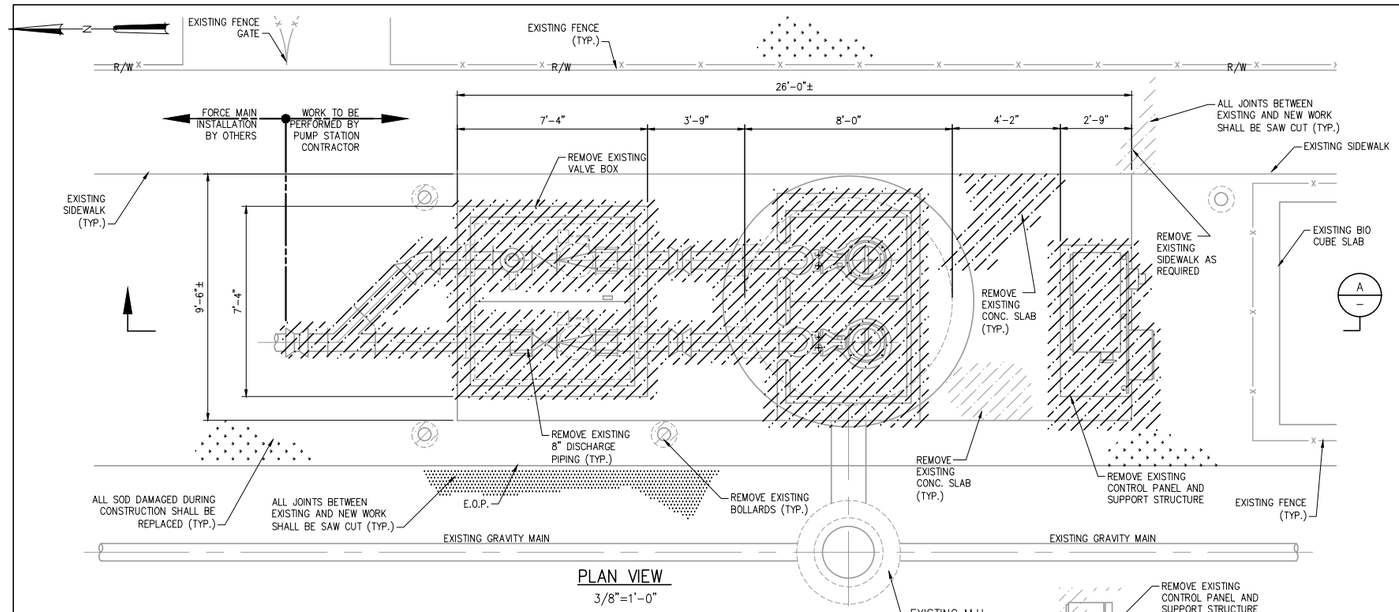

PLAN VIEW
3/8"=1'-0"

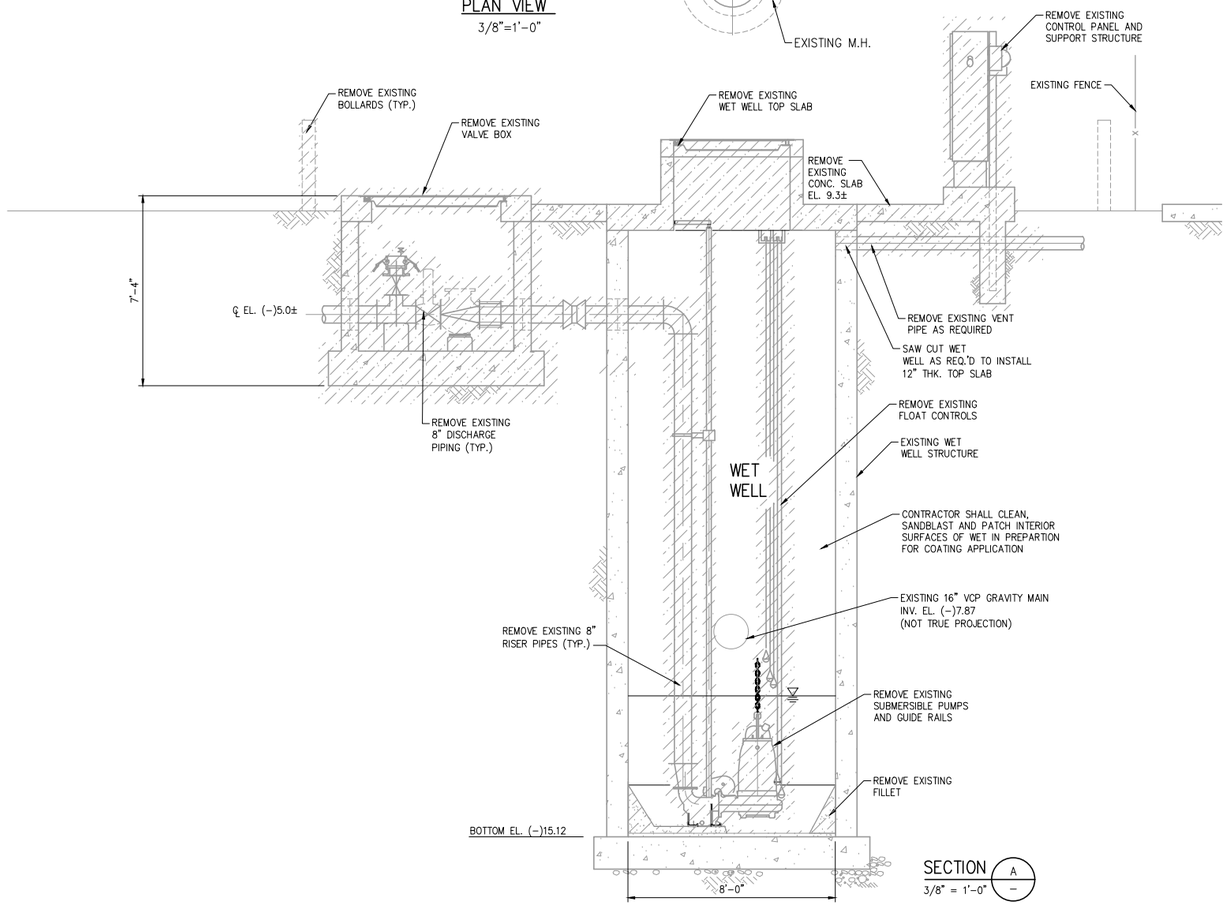

SECTION A
3/8" = 1'-0"

NOTES:

1. EXISTING PLAN VIEW SHOWN FOR CLARITY. IT IS THE CONTRACTORS RESPONSIBILITY TO FIELD VERIFY ALL EXISTING CONDITIONS. NO ADDITIONAL PAYMENT SHALL BE MADE FOR DEVIATIONS DUE TO DISCREPANCIES BETWEEN EXISTING SITE CONDITIONS SHOWN ON CONTRACT DOCUMENTS AND ACTUAL FIELD CONDITIONS.
2. ELEVATION DATA PROVIDED HAS BEEN OBTAIN FROM AS-BUILT ELEVATIONS REFERENCING VERTICAL DATUM NGVD 1929.
3. ALL JOINTS BETWEEN EXISTING AND NEW WORK SHALL BE SAW CUT
4. CONTRACTOR SHALL PROVIDE CORE DRILL OPENING FOR CONDUITS AND DRAIN PIPES
5. FEMA FLOOD MAP 12086C0282L ZONE X

LEGEND	
	EXISTING
	DEMOLITION

3/8"=1'-0" 12" 0 1 2 4'

NO.	DATE	ISSUED FOR	BY

DESIGNED CLK
DRAWN CLK
CHECKED JOH
PROJ. ENGR. CLK

CHRISTOPHER L. KISH P.E.
No. 55480

Hazen
999 Ponce de Leon Boulevard, Suite 1150
Coral Gables, FL 33134
Certificate of Authorization Number: 2771

SCALE: AS NOTED

CONTRACT: –
CLIENTS PROJECT: –
ENGINEERS PROJECT: 46016-016
CAD REFERENCE: 46016-006-M01

CITY OF HIALEAH
DEPARTMENT OF PUBLIC WORK

CITY OF HIALEAH
PUMP STATION 12 UPGRADES

DEMOLITION PLAN AND SECTIONS

DATE: MAY 2018
SHEET: 05 OF 14
DRAWING: M01

BID SET

PLOT DATE: 5/16/2018 8:36 AM BY: CKISH

XREFs= ..\Tblock\46016-006TB

File = G:\46016-000-HWD\46016-006\Drawings\PS 12 (2017)\New folder\Mechanical\46016-006-M01 Saved by ckish Save date = 5/16/2018 8:22 AM

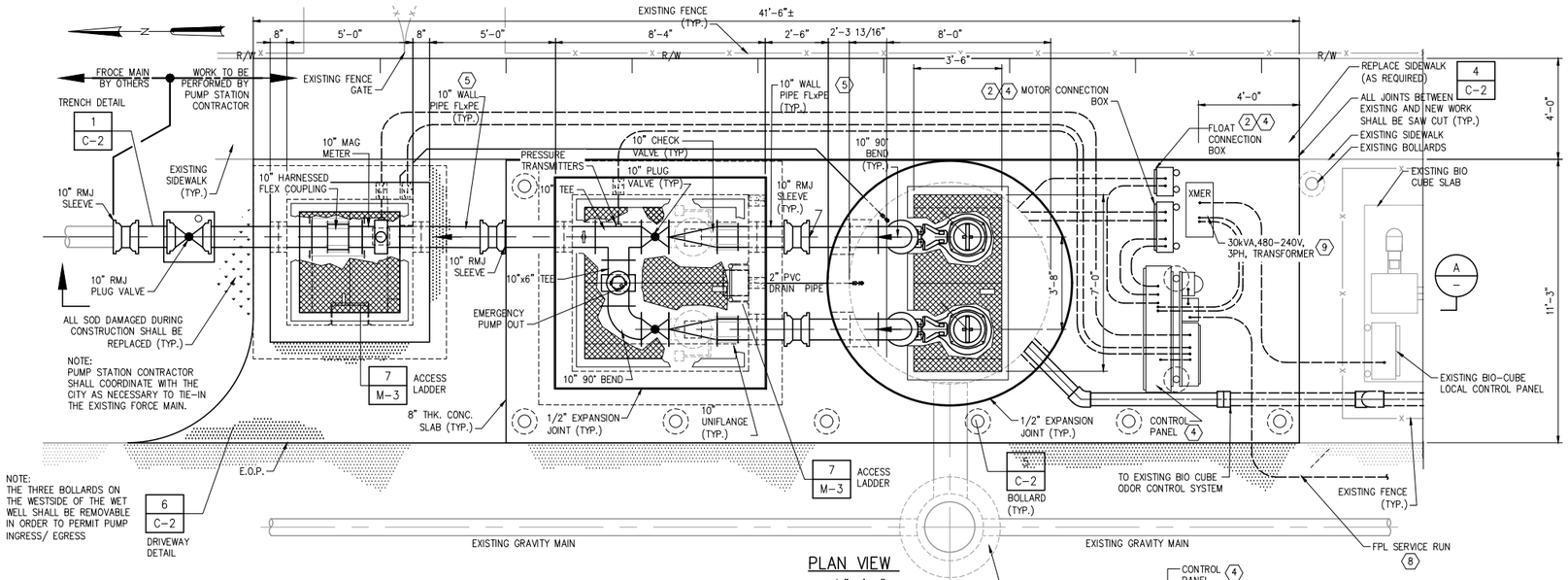

PLAN VIEW

3/8"=1'-0"

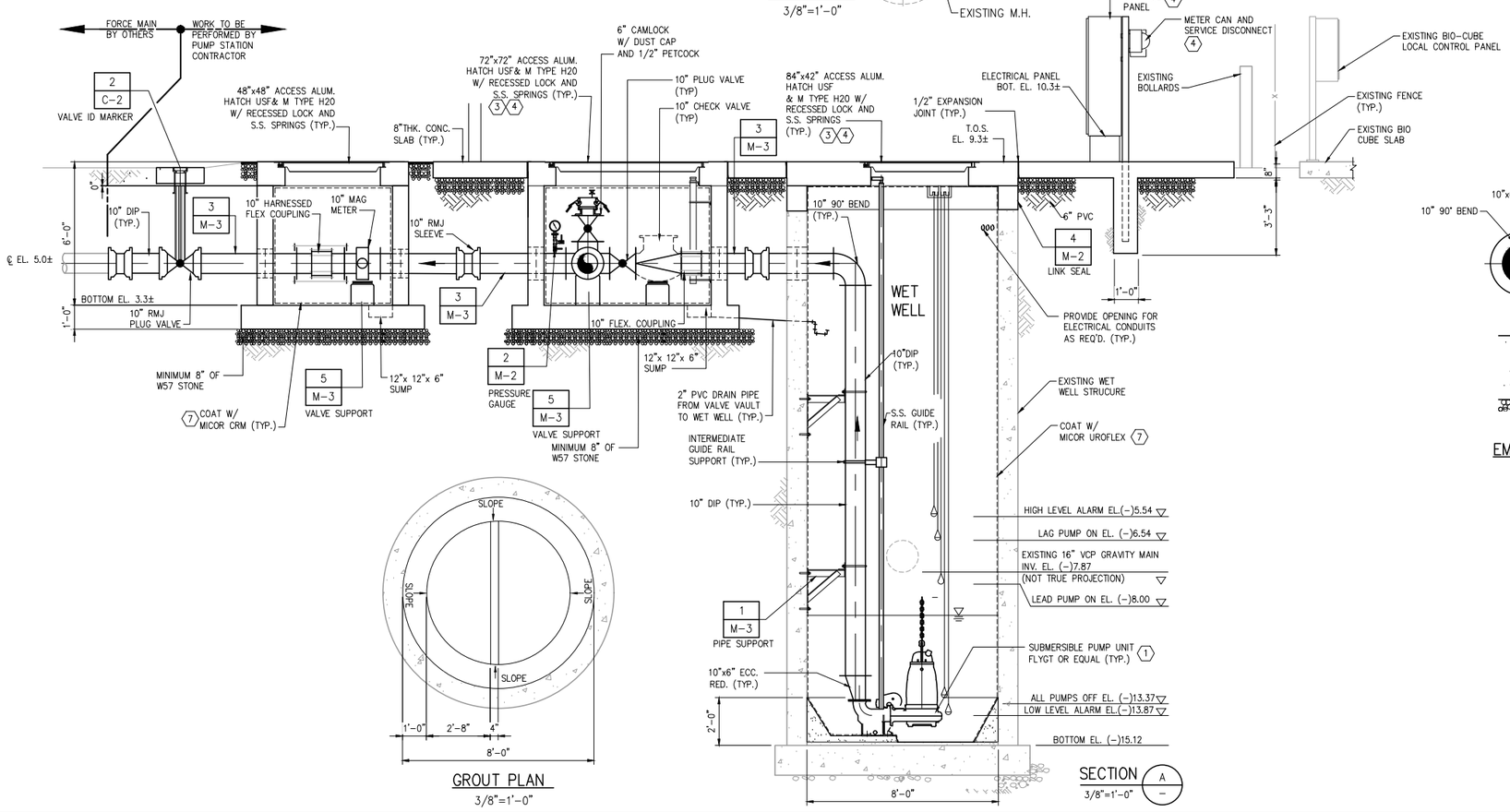

SECTION A –

3/8"=1'-0"

GROUT PLAN

3/8"=1'-0"

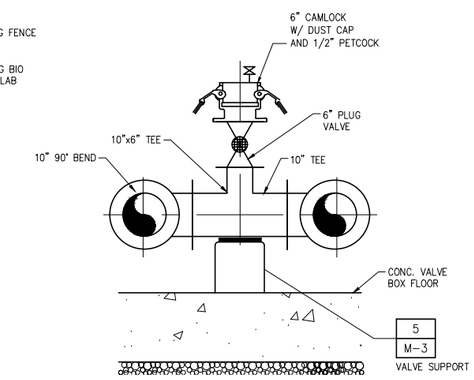

EMERGENCY PUMP OUT DETAIL

3/4"=1'-0"

PUMP STATION NOTES

1. PUMP: SUBMERSIBLE DISCHARGE, INCLUDES 304 SCH 40 S.S. RAILS, WITH S.S. INTERMEDIATE SUPPORT. PUMP SHALL BE EQUIPPED WITH SEAL FAILURE SENSORS AND HEAT SENSORS. SET PUMP IN FIELD IN PROPER RELATION TO COVER, TO INSURE ACCURATE ALIGNMENT OF STAINLESS STEEL GUIDE RAILS. ANCHOR PUMP DISCHARGE CONNECTION TO SUMP FLOOR WITH APPROPRIATE EXPANSION SHIELDS.
2. LEVEL CONTROL FLOATS SHALL EACH BE PROVIDED WITH A MINIMUM OF FORTY (40) FEET OF ELECTRIC CABLE AND WEIGHTS. SPLICING NOT ALLOWED.
3. WET WELL/VALVE BOX ACCESS HATCH COVER SHALL BE A MINIMUM OF 84"x42", 72"x72" AND 48"x48" RESPECTIVELY , DOOR LEAF SHALL BE 1/4-INCH THICK STEEL DIAMOND PLATE REINFORCED FOR AN AASHTO H-20 WHEEL LOAD. THE FRAME SHALL BE 1/4-INCH THICK STEEL ANGLE WITH 1"x4" ANCHORS WELDED AT 18 INCHES ON CENTER. THE FLOOR ACCESS DOOR SHALL BE EQUIPPED WITH A FLUSH STEEL DROP HANDLE THAT DOES NOT PROTUDE ABOVE THE COVER, AND A 316 STAINLESS STEEL HOLD OPEN ARM WITH RED VINYL GRIP THAT AUTOMATICALLY LOCKS THE COVER IN THE 90 DEGREE OPEN POSITION.
4. PADLOCK FOR ACCESS HATCH COVERS, CONTROL PANELS, AND DISCONNECTS
5. ALL WALL PENETRATIONS THROUGH WET WELL, SHALL BE MADE WITH NON SHRINK GROUT BY SIKA OR APPROVED EQUAL.
6. NEW 6" VENT PIPE REQUIRED WITH STAINLESS STEEL INSECT SCREEN.
7. ENTIRE INTERIOR SURFACE OF VALVE/ METER VAULT SHALL BE COATED WITH MICOR CRM MODIFIED (NON-SKID) BY EPOXYTEC INTERNATIONAL. WET WELL SHALL BE COATED WITH MICOR UROFLEX BY EPOXYTEC INTERNATIONAL.
8. FPL CONDUIT SHALL HAVE A MINIMUM OF 30-INCHES OF COVER AND IT SHALL BE CONCRETE ENCASED PVC CONDUIT
9. 30kVA, 3PH, 480-240V NEMA 4X ENCAPSULATED DESIGN, CUTTLER HAMMER,TYPE EPT OR EQUAL.

PUMP INFORMATION CHART	
DESIGN POINT:	1,480 GPM @ 69'
PUMP MANUFACTURER:	FLYGT
PUMP MODEL:	NP-3171 MT
IMPELLER (No.)	433 (266 mm)
HORSEPOWER (HP)	34
SPEED (RPM)	1,760

LEVEL CONTROL (FLOATS)	
HIGH LEVEL ALARM	(-)5.54
LAG PUMP ON	(-)6.54
LEAD PUMP ON	(-)8.00
ALL PUMPS OFF	(-)13.37
LOW LEVEL ALARM	(-)13.87

(*) DIMENSIONS ARE FROM AS-BUILT INFORMATION. ACTUAL DIMENSION MAY VARY.

EXACT LOCATION OF BIOFILTER SUPPLY FROM WET WELL IS NOT KNOW. CONTRACTOR SHALL LOCATE EXISTING PIPE AND TIE-IN ACCORDINGLY.

NOTES:

1. ALL JOINTS BETWEEN EXISTING AND NEW WORK SHALL BE SAW CUT
2. CONTRACTOR SHALL PROVIDE CORE DRILL OPENING FOR CONDUITS AND DRAIN PIPE
3. FEMA FLOOD MAP 12086C0282L ZONE X
4. WET WELL SHALL BE CONSIDERED CLASS 1, DIVISION 1, GROUP D

LEGEND	
———	EXISTING
———	PROPOSED

3/8"=1'-0"

12" 0 1 2 4'

PLOT DATE: 5/16/2018 8:37 AM BY: OKISH

NO.	DATE	ISSUED FOR	BY

DESIGNED CLK
DRAWN CLK
CHECKED JOH
PROJ. ENGR. CLK

CHRISTOPHER L. KISH P.E.
No. 55480

Hazen
999 Ponce de Leon Boulevard, Suite 1150
Coral Gables, FL 33134
Certificate of Authorization Number: 2771

SCALE AS NOTED

CONTRACT: –
CLIENTS PROJECT: –
ENGINEERS PROJECT: 46016-016
CAD REFERENCE: 46016-006-M02

CITY OF HIALEAH DEPARTMENT OF PUBLIC WORK

CITY OF HIALEAH
PUMP STATION 12 UPGRADES

MODIFICATION PLAN AND SECTION

DATE: MAY 2018
SHEET: 06 OF 14
DRAWING: M02

BID SET

XREFs= ..\Tblock\46016-006TB

File = Q:\46016-000-HWD\46016-006\Drawings\PS 12 (2017)\New folder\Mechanical\46016-006-M02 Saved by alexander Save date = 5/16/2018 8:22 AM

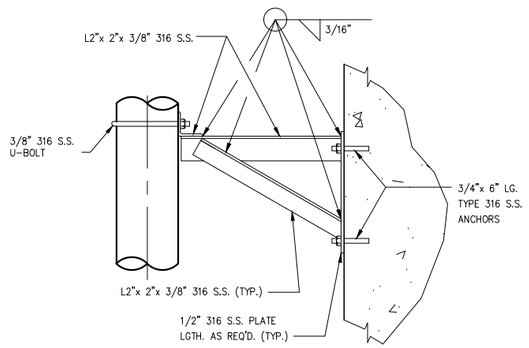

PIPE SUPPORT DETAIL

DETAIL 1
NTS –

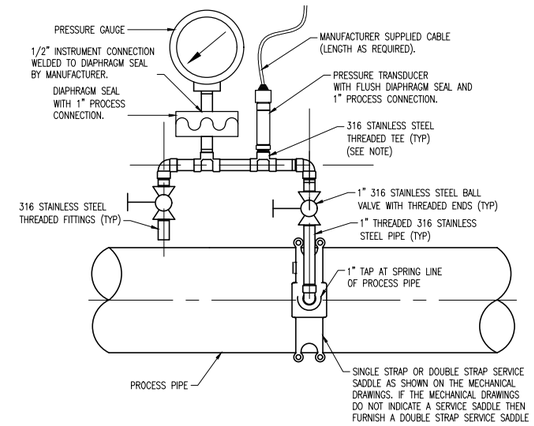

PRESSURE GAUGE AND TRANSMITTER DETAIL

DETAIL 2
NTS –

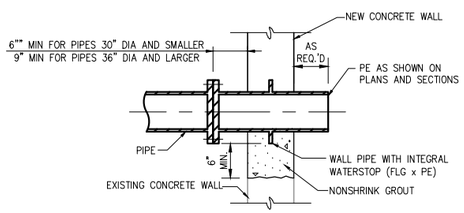

WALL/ SLAB PENETRATION FL x PE

DETAIL 3
NTS –

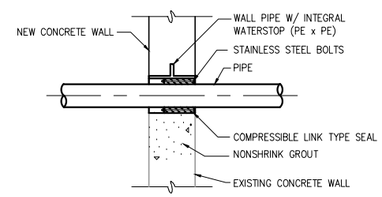

WALL PENETRATION WITH LINK SEAL

DETAIL 4
NTS –

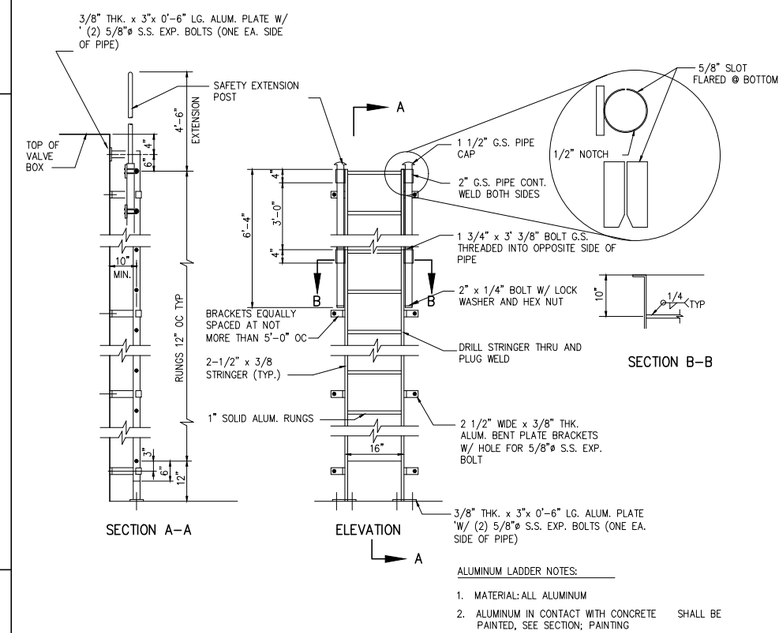

ALUMINUM LADDER NOTES:

1. MATERIAL: ALL ALUMINUM
2. ALUMINUM IN CONTACT WITH CONCRETE SHALL BE PAINTED, SEE SECTION; PAINTING

ALUMINUM ACCESS LADDER

DETAIL 7
NTS –

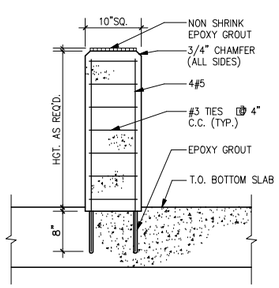

PIPE SUPPORT DETAIL

DETAIL 5
NTS –

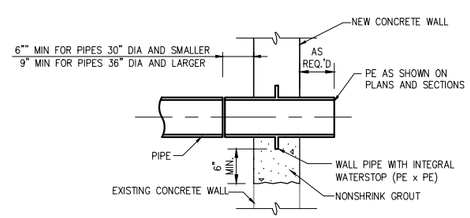

WALL/ SLAB PENETRATION PE x PE

DETAIL 6
NTS –

NO.	DATE	ISSUED FOR	BY

DESIGNED CLK
DRAWN CLK
CHECKED JOH
PROJ. ENGR. CLK

CHRISTOPHER L. KISH P.E.
No. 55480

Hazen
999 Ponce de Leon Boulevard, Suite 1150
Coral Gables, FL 33134
Certificate of Authorization Number: 2771

SCALE
AS NOTED

CONTRACT: –
CLIENTS PROJECT: –
ENGINEERS PROJECT: 46016-016
CAD REFERENCE: 46016-006-M03

CITY OF HIALEAH
DEPARTMENT OF PUBLIC WORK

CITY OF HIALEAH
PUMP STATION 12 UPGRADES

MECHANICAL DETAILS

DATE: MAY 2018
SHEET: 07 OF 14
DRAWING: M03

BID SET

File = O:\46016-000-HWD\46016-006\Drawings\PS 12 (2017)\New folder\Mechanical\46016-006-M03 Saved by cklsh Save date = 5/16/2018 8:22 AM

GENERAL NOTES

G-1 THESE NOTES ARE GENERAL AND SUPPLEMENT THE SPECIFICATIONS. THESE NOTES APPLY TO THE ENTIRE PROJECT UNLESS MODIFIED OR NOTED OTHERWISE IN THE CONTRACT DOCUMENTS.

G-2 ALL STRUCTURAL DRAWINGS SHALL BE USED IN CONJUNCTION WITH THE MECHANICAL, ELECTRICAL, SHOP DRAWINGS, AND SPECIFICATIONS.

G-3 STANDARD DETAILS SHALL BE USED WHEN REFERRED TO OR WHEN NO MORE RESTRICTIVE OR DIFFERENT DETAILS ARE SHOWN ON THE DRAWINGS.

G-4 DESIGN IS IN ACCORDANCE WITH AND CONSTRUCTION SHALL COMPLY WITH THE PROVISIONS OF THE FLORIDA BUILDING CODE 2017 WITH LOCAL AMENDMENTS, AMERICAN CONCRETE INSTITUTE BUILDING CODE, AND PROJECT SPECIFICATIONS. THE DESIGN LOADS AND OTHER DESIGN VALUES GIVEN IN NOTE G-5 WERE USED FOR DESIGN OF STRUCTURES UNLESS NOTED OTHERWISE ON THE DRAWINGS.

G-5 LIVE LOADS:

STRUCTURE	TOP SLAB	FIRST FLOOR
PUMP STATION	AASHTO H20	–
VALVE VAULT	AASHTO H20	–

G-6 WIND DESIGN CRITERIA. RISK CATEGORY = III
ULTIMATE WIND SPEED = 186 MPH
EXPOSURE CATEGORY = C

G-7 ALL DIMENSIONS INDICATED (*) SHALL BE VERIFIED BY FIELD MEASUREMENTS FOR EXISTING STRUCTURES OR BY SHOP DRAWINGS FOR EQUIPMENT FURNISHED. STRUCTURAL DIMENSIONS NOT SHOWN BUT CONTROLLED BY OR RELATED TO EQUIPMENT SHALL BE VERIFIED BY THE CONTRACTOR WITH THE MANUFACTURER PRIOR TO CONSTRUCTION.

G-8 THE CONTRACTOR IS RESPONSIBLE FOR VERIFYING ALL EXISTING INFORMATION IN THE FIELD.

G-9 IF A CONFLICT IS FOUND BETWEEN DIFFERENT PORTIONS OF THE CONTRACT DOCUMENTS, THE CONTRACTOR SHALL NOTIFY THE ENGINEER IMMEDIATELY. CONTINUED CONSTRUCTION OF THE AREA IN CONFLICT SHALL BE AT THE CONTRACTOR'S OWN RISK UNTIL THE CONFLICT IS RESOLVED.

G-10 EQUIPMENT ANCHOR BOLT SIZES, TYPES, EMBEDMENT AND PATTERNS SHALL BE VERIFIED WITH THE MANUFACTURER. ALL BOLT PATTERNS SHALL BE TEMPLATED TO ENSURE ACCURACY OF PLACEMENT.

G-11 STRUCTURES HAVE BEEN DESIGNED FOR OPERATIONAL LOADS ON THE COMPLETED STRUCTURE. DURING CONSTRUCTION, THE STRUCTURES SHALL BE PROTECTED BY BRACING AND TEMPORARY SUPPORTS WHEREVER EXCESSIVE CONSTRUCTION LOADS MAY OCCUR. OVERSTRESSING OF ANY STRUCTURAL ELEMENT IS PROHIBITED.

G-12 NO BACKFILL SHALL BE PLACED AGAINST ANY SUBSTRUCTURE WALLS UNLESS ALL ADJACENT SUPPORTING ELEMENTS HAVE ACHIEVED DESIGN STRENGTH OR WALLS HAVE BEEN PROPERLY BRACED, AND IN ANY CASE NOT SOONER THAN 28 DAYS AFTER THE PLACING OF CONCRETE UNLESS APPROVED BY THE ENGINEER. SUPPORTING ELEMENTS SHALL INCLUDE ADJACENT WALLS, SLABS, BEAMS AND COLUMNS.

STRUCTURAL METALS

M-1 DETAIL, FABRICATE, AND ERECT STRUCTURAL STEEL IN ACCORDANCE WITH AISC SPECIFICATION FOR STRUCTURAL STEEL BUILDINGS, AISC 360-05.

M-2 STEEL MATERIAL:

A) STRUCTURAL TUBING:	ASTM A500, GRADE B OR A501 (42 KSI)
B) STRUCTURAL PIPE:	ASTM A53, TYPE E OR S, GRADE B (35 KSI)
C) PLATES AND BARS:	ASTM A36 UNO (36 KSI)
D) STRUCTURAL W SHAPES:	ASTM A992 (50 KSI)
E) STRUCTURAL S, M, C,& L SHAPES:	ASTM A36 (36 KSI)
F) STRUCTURAL HP SHAPES:	ASTM A 572, GRADE 50 (50 KSI)

M-3 ALL STAINLESS STEEL FABRICATIONS SHALL BE TYPE 316, UNLESS NOTED OTHERWISE.

M-4 ALUMINUM SHALL BE ALLOY 6061-T6 UNLESS NOTED OTHERWISE.

M-5 ALL BOLTS, ANCHOR BOLTS, AND CONCRETE ANCHORS CONNECTING ALUMINUM SHALL BE TYPE 316 STAINLESS STEEL.

M-6 DETAIL, FABRICATE, AND ERECT ALUMINUM IN ACCORDANCE WITH THE LATEST EDITION OF THE ALUMINUM ASSOCIATION ALUMINUM DESIGN MANUAL.

M-7 ALUMINUM SHALL BE ISOLATED FROM CONTACT WITH CONCRETE AND DISSIMILAR METALS.

M-8 BOTTOM SURFACES OF BASE PLATES SHALL BE GROUTED TO INSURE FULL BEARING CONTACT WITH CONCRETE SLAB.

CONCRETE (CAST-IN-PLACE)

C-1 DESIGN OF CONCRETE ELEMENTS INCLUDING WALLS, FORMED SLABS, BEAMS, AND COLUMNS IS IN ACCORDANCE WITH ACI 318 (CODE REQUIREMENTS FOR STRUCTURAL CONCRETE) AND 350 (CODE REQUIREMENTS FOR ENVIRONMENTAL ENGINEERING CONCRETE STRUCTURES).

C-2 FOR CONCRETE MIX DESIGN SEE SPECIFICATION SECTION 03300.

C-3 ALL CONCRETE SHALL BE CLASS "A" CONCRETE UNLESS OTHERWISE NOTED ON THE PLANS OR THE SPECIFICATIONS (F'c = 4,500 PSI). OTHER CLASSES ARE NOTED IN THE SPECIFICATIONS.

C-4 ALL BAR REINFORCING SHALL CONFORM TO ASTM A615, GRADE 60. WELDED WIRE FABRIC SHALL CONFORM TO ASTM A185.

C-5 ALL REINFORCING SHALL BE DETAILED ACCORDING TO THE "MANUAL OF STANDARD PRACTICE FOR DETAILING REINFORCED CONCRETE STRUCTURES" BY ACI.

C-6 CONCRETE COVER FOR REINFORCING (UNLESS NOTED OTHERWISE ON THE DRAWINGS):

1) CONCRETE DEPOSITED DIRECTLY AGAINST SOIL	3"
2) FORMED CONCRETE NOT EXPOSED TO EARTH, WEATHER, OR LIQUIDS	
A. SLABS	3/4"
B. WALLS	3/4"
C. BEAMS AND COLUMNS (TO PRIMARY REINF)	2"
D. BEAMS AND COLUMNS (TO STIRRUPS)	1 1/2"
3) FORMED CONCRETE SURFACES EXPOSED TO EARTH, WEATHER, WATER, OR SEWAGE	
A. SLABS (#5 OR SMALLER)	2"
B. SLABS (#6 OR LARGER)	2"
C. WALLS	2"
D. BEAMS AND COLUMNS (TO PRIMARY REINF)	2 1/2"
E. BEAMS AND COLUMNS (TO STIRRUPS)	2"

C-7 ALL EMBEDDED ITEMS SHALL BE PLACED BEFORE POURING CONCRETE. LOCATION AND SIZE OF ALL OPENINGS, ENCASED CONDUITS, PIPING, DUCTS, PLATES, INSERTS, ANGLES AND ANCHOR BOLTS SHALL BE VERIFIED WITH MANUFACTURER'S SHOP DRAWINGS AND DRAWINGS OF ALL OTHER DISCIPLINES.

C-8 SPLICES SHALL BE CLASS 'B' CONFORMING TO THE PROVISIONS OF ACI 318 UNLESS NOTED OTHERWISE.

C-9 CONSTRUCTION JOINTS SHALL BE LOCATED AS SHOWN ON THE DRAWINGS. CONSTRUCTION JOINTS NOT SHOWN SHALL BE SUBMITTED BY THE CONTRACTOR FOR THE APPROVAL OF THE ENGINEER PRIOR TO SUBMITTING REBAR SHOP DRAWINGS. VERTICAL CONSTRUCTION JOINTS IN WALLS AND HORIZONTAL JOINTS IN SLABS SHALL BE PROVIDED AT A SPACING NOT GREATER THAN 45 FEET ON CENTER. FOR EXPOSED WALLS WITH FLUID OR EARTH ON THE OPPOSITE SIDE, THE SPACING BETWEEN VERTICAL JOINTS SHALL BE A MAXIMUM OF 25 FEET.

C-10 ALL JOINTS WHICH ARE IN MEMBERS IN CONTACT WITH LIQUID OR BELOW GRADE SHALL HAVE A WATERSTOP. CONSTRUCTION JOINTS SHALL HAVE A 6" PVC RIBBED WATERSTOP. EXPANSION JOINTS SHALL HAVE A 9" PVC CENTERBULB RIBBED WATERSTOP. IN VERTICAL JOINTS, WATERSTOPS SHALL TERMINATE NO LESS THAN 18" ABOVE THE MAXIMUM WATER SURFACE OR 18" ABOVE GRADE, WHICHEVER IS HIGHER.

C-11 SLABS WITH SLOPING SURFACES SHALL HAVE THE INDICATED SLAB THICKNESS MAINTAINED AS THE MINIMUM. SLAB BOTTOMS CAN EITHER SLOPE WITH THE TOP SURFACE OR BE LEVEL. REINFORCEMENT IN SLABS WITH SLOPING SURFACES SHALL BE PLACED AT THE REQUIRED CLEARANCE FROM THE SLAB SURFACE.

C-12 ALL EXPOSED CORNERS SHALL HAVE A 3/4" CHAMFER OR A 1/2" RADIUS TOOLED CORNER.

C-13 EQUIPMENT SUPPORTS, ANCHORAGES, OPENINGS, RECESSES AND REVEALS NOT SHOWN ON THE STRUCTURAL DRAWINGS BUT REQUIRED BY OTHER CONTRACT DOCUMENTS, SHALL BE PROVIDED FOR PRIOR TO PLACING CONCRETE.

C-14 REINFORCING BARS AND ACCESSORIES SHALL NOT BE IN CONTACT WITH ANY METAL PIPE, PIPE FLANGE, METAL CONDUIT, OR OTHER METAL PARTS EMBEDDED IN CONCRETE. A MINIMUM CLEARANCE OF 2" SHALL BE PROVIDED.

C-15 DOWELS, ANCHOR BOLTS, PIPES, WATERSTOPS AND OTHER EMBEDDED ITEMS SHALL BE HELD SECURELY IN POSITION WHILE CONCRETE IS BEING PLACED.

C-16 CONDUITS AND OTHER SIMILAR ITEMS EMBEDDED IN OR PENETRATING THROUGH CONCRETE SHALL BE SPACED ON CENTER NOT LESS THAN 3 TIMES THEIR OUTSIDE DIMENSION, BUT NOT LESS THAN 2 1/2" CLEAR. WHEN SUCH ITEMS ARE EMBEDDED IN WALLS OR SLABS, THEY SHALL NOT OCCUPY MORE THAN 1/3 OF THE MEMBER THICKNESS.

C-17 AT ALL TYPICAL CURBS, EQUIPMENT PADS, AND PIPE SUPPORT PIERS, REINFORCING DOWELS SHOWN MAY BE REPLACED WITH MATCHING DOWELS SET IN EPOXY IN DRILLED HOLES AS SPECIFIED. DOWELS LOCATED CLOSER THAN 3" FROM ANY EDGE OF CONCRETE SHALL NOT BE REPLACED WITH DRILLED DOWELS.

C-18 DRILLED ADHESIVE DOWELS (WHERE DOWELS ARE SHOWN TO BE PLACED INTO HARDENED CONCRETE):

A) THE HOLE DIAMETER SHALL BE NO LARGER THAN 1/8" GREATER THAN THE DIAMETER OF THE REINFORCING BAR AT THE DEFORMATIONS.
B) THE DEPTH OF EMBEDMENT SHALL BE 12 BAR DIAMETERS, UNLESS NOTED OTHERWISE.
C) ADJUST THE DOWEL LOCATIONS AS NEEDED TO AVOID DRILLING THROUGH ANY REINFORCING BARS. IF THE LOCATION NEEDS TO BE MODIFIED, CONTACT THE ENGINEER.

C-19 CLEAR DISTANCE FROM ANCHOR BOLTS TO ANY CONCRETE EDGE SHALL BE 4" MINIMUM UNLESS NOTED OTHERWISE.

DEMOLITION

D-1 FOR DEMOLITION REQUIREMENTS, REFER TO SPECIFICATION 02050 – DEMOLITION.

D-2 ALL CONCRETE DEMOLITION OF WALLS OR SLABS SHOWN SHALL BE SELECTIVE DEMOLITION BY CORE DRILLING OR SAWCUTTING AND CAREFUL REMOVAL OF CONCRETE SHOWN TO BE REMOVED. NO OVER CUTTING OF AREAS TO BE DEMOLISHED SHALL BE PERMITTED. CONTRACTOR SHALL CORE DRILL CORNERS OF OPENING PRIOR TO SAWCUTTING. EXPLOSIVES AND VIBRATORY HAMMERS SHALL NOT BE USED FOR DEMOLITION WORK.

D-3 UNLESS ANCHORING DEVICES AND/OR REINFORCEMENT IS NOTED TO REMAIN FOLLOWING DEMOLITION, REMOVE AND/OR BURN BACK ANCHORS AND REINFORCEMENT STEEL 1/2" MIN BELOW SURFACE AND VOIDS CREATED SHALL BE FILLED WITH EPOXY RESIN BINDER.

D-4 CONCRETE SURFACES LEFT EXPOSED FOLLOWING DEMOLITION SHALL BE SEALED WITH EPOXY RESIN COATING SUCH AS "SIKAGARD" BY SIKA CORPORATION, "DURACOTE 240" BY TAMMS INDUSTRIES, OR APPROVED EQUAL.

D-5 A DETAILED CONSTRUCTION AND DEMOLITION PLAN SHALL BE SUBMITTED TO THE ENGINEER AND APPROVED BY THE ENGINEER AND OWNER PRIOR TO BEGINNING CONSTRUCTION. ANY SHUTDOWNS SHALL BE SUBMITTED TO, COORDINATED WITH, AND APPROVED BY THE OWNER. ONCE APPROVED, CONTRACTOR SHALL PROVIDE A MINIMUM OF THREE (3) WEEKS NOTICE TO OWNER PRIOR TO SHUTDOWN.

EXISTING INFORMATION

X-1 ALL EXISTING INFORMATION SHOWN ON THESE DRAWINGS INCLUDING LOCATION, DIMENSIONS, ELEVATIONS, AND CONFIGURATIONS IS DERIVED FROM RECORD DRAWINGS PROVIDED BY THE CITY AND IS NOT GUARANTEED TO BE COMPLETE OR CORRECT. RECORD DRAWINGS ARE AVAILABLE FOR REVIEW AT THE CITY'S OFFICES.

X-2 THE CONTRACTOR IS RESPONSIBLE FOR VERIFYING ALL EXISTING INFORMATION IN THE FIELD AS REQUIRED FOR DEMOLITION AND MODIFICATIONS.

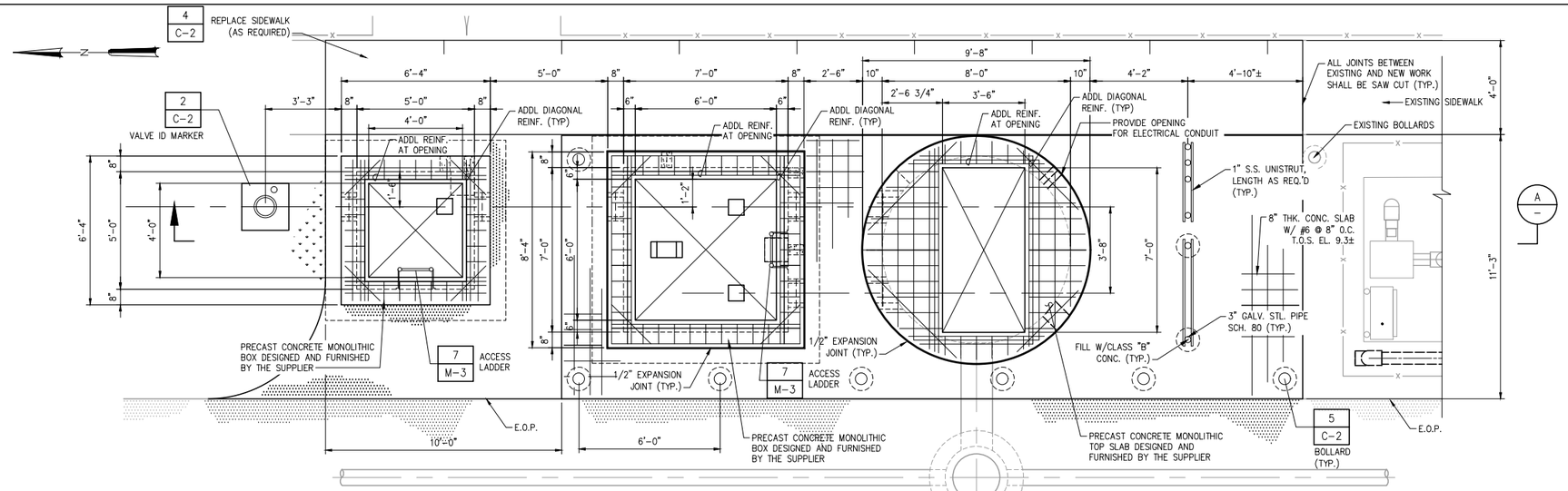

STRUCTURAL PLAN VIEW

3/8"=1'-0"

(*)NOTE:

1. PRIOR TO FABRICATION, CONTRACTOR SHALL VERIFY DEPTH OF EXISTING FORCE MAIN
2. PRIOR TO FABRICATION, CONTRACTOR SHALL VERIFY WET WELL DIAMETER TOP SLAB REQUIREMENTS

NOTE:
THE THREE BOLLARDS ON THE WEST SIDE OF THE WET WELL SHALL BE REMOVABLE IN ORDER TO PERMIT PUMP INGRESS/ EGRESS

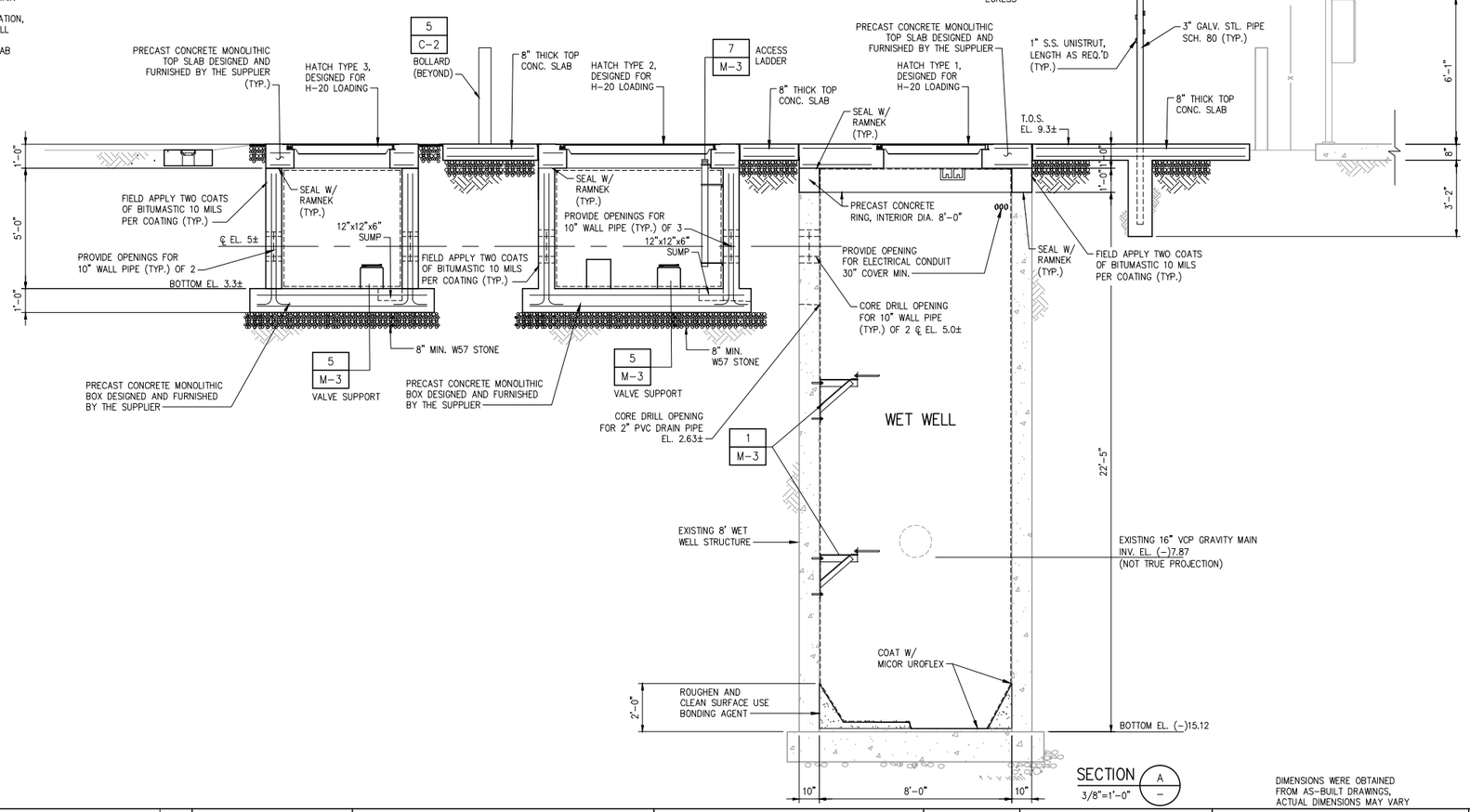

SECTION A

3/8"=1'-0"

DIMENSIONS WERE OBTAINED FROM AS-BUILT DRAWINGS, ACTUAL DIMENSIONS MAY VARY

NOTES

1. HATCH TYPE 1 SHALL BE 42"x84" ACCESS ALUM. HATCH USF & M TYPE H20 W/RECESSED LOCK AND S.S. SPRINGS.
2. HATCH TYPE 2 SHALL BE 72"x72" ACCESS ALUM. HATCH USF & M TYPE H20 W/ RECESSED LOCK AND S.S. SPRINGS.
3. HATCH TYPE 3 SHALL BE 48"x48" ACCESS ALUM. HATCH USF & M TYPE H20 W/ RECESSED LOCK AND S.S. SPRINGS.
4. PRECAST CONCRETE TOP SLAB AND STRUCTURES SHALL BE DESIGNED/ SUPPLIED BY PRECAST MANUFACTURER DESIGN CALCULATIONS SHALL BE SIGNED AND SEALED BY STATE OF FLORIDA P.E. STRUCTURAL CALCULATIONS SHALL BE PROVIDED DURING THE SHOP DRAWING REVIEW PROCESS.

LEGEND

EXISTING

PROPOSED

3/8"=1'-0" 12" 0 1 2 4'

NO.	DATE	ISSUED FOR	BY

DESIGNED CLK
DRAWN CLK
CHECKED JOH
PROJ. ENGR. CLK

SHAJAN JOYKUTTY P.E.
No. 43323

Hazen
999 Ponce de Leon Boulevard, Suite 1150
Coral Gables, FL 33134
Certificate of Authorization Number: 2771

SCALE: AS NOTED

CONTRACT: –
CLIENTS PROJECT: –
ENGINEERS PROJECT: 46016-016
CAD REFERENCE: 46016-006-S02

CITY OF HIALEAH
DEPARTMENT OF PUBLIC WORK

CITY OF HIALEAH
PUMP STATION 12 UPGRADES

STRUCTURAL MODIFICATION
PLAN AND SECTION

DATE: MAY 2018
SHEET: 09 OF 14
DRAWING: S02

BID SET

PLOT DATE: 5/16/2018 8:40 AM BY: CKSH

XREFS= ..\Base\LS012-StrucPlan,..\Tblock\46016-006TB,..\Mechanical\46016-006-M01

File = G:\46016-000-HWD\46016-006\Drawings\PS 12 (2017)\New folder\Structural\46016-006-S02 Saved by ckish Save date = 5/16/2018 8:22 AM

ABBREVIATIONS

ABBR.	DESCRIPTION
A	AMMETER, AMPERE
AC	ALTERNATING CURRENT
AF	CB AMPERE FRAME SIZE
AFD	ADJUSTABLE FREQUENCY DRIVE
AFF	ABOVE FINISHED FLOOR
AFG	ABOVE FINISHED GRADE
AHJ	AUTHORITY HAVING JURISTICTION
AIC	SYMM. AMPS INTERRUPTING CAP.
AL	ALUMINUM
AS	AMMETER SENSOR OR SWITCH
ASYM	ASYMMETRICAL
AT	CB AMPERE TRIP SETTING
ATS	AUTOMATIC TRANSFER SWITCH
AUX	AUXILIARY
AWG	AMERICAN WIRE GAUGE
BC	BARE COPPER
BCG	BATTERY CHARGER
BSDG	BUILDING
C	CONDUIT, CONTACTOR
CB	CIRCUIT BREAKER
CDB	CONC ENCASED DUCT BANK
CKT	CIRCUIT
CMS	COMBINATION MOTOR STARTER
CNTL	CONTROL
C.O.	CONDUIT ONLY
CONC	CONCRETE
CPT	CONTROL POWER TRANSFORMER
CR	CONTROL RELAY
CT	CURRENT TRANSFORMER
DC	DIRECT CURRENT
DEF	DIESEL EXHAUST FLUID
EC	EMPTY CONDUIT
ECDB	EX CONC ENCASED DUCT BANK
ECP	EQUIPMENT CONTROL PANEL
EF	EXHAUST FAN
EG	EMERGENCY GENERATOR
EMH	ELECT MANHOLE (SEE MAS)
EMT	ELECTRICAL METAL TUBING
ENCL	ENCLOSURE
EPB	EXISTING PULLBOX
EQUIP	EQUIPMENT
ETM	ELAPSED TIME METER
EX	EXISTING
FDR	FEEDER
F,FU	FUSE
FI	FLOW INDICATOR
FLA	FULL LOAD AMPS
FLEX	FLEXIBLE CONDUIT
FLR	FLOOR
FLUOR	FLUORESCENT
FM	FLOW METER
F.O.	FAIL OPEN
FOC	FIBER OPTIC CABLE
FS	FLOW SWITCH
FT	FLOW TRANSMITTER
FUT	FUTURE
FVNR	FULL VOLTAGE NON-REVERSING
G	GREEN, GROUND
GALV	GALVANIZED
GDR	GROUNDING RESISTOR
GEC	GROUNDING ELECTRODE CONDUCTOR
GEN	GENERATOR
GFCI	GROUND FAULT CIRCUITINTERRUPTER
GFR	GROUND FAULT RELAY
GND	GROUND
GRS	GALVANIZED RIGID STEEL (CONDUIT)
GTB	GENERATOR TIE BREAKER

ABBREVIATIONS

ABBR.	DESCRIPTION
HH	HANDHOLE
HID	HIGH INTENSITY DISCHARGE
HOA	HAND/OFF/AUTO
HOR	HAND/OFF/REMOTE
HP	HORSEPOWER
HPS	HIGH PRESSURE SODIUM
HTR	HEATER
HV	HIGH VOLTAGE
HVAC	HEAT, VENTILATION, AIR COND.
HZ	HERTZ (FREQUENCY)
IC	INTERRUPTING CAPACITY
ID	INSIDE DIAMETER
IMC	INTERMEDIATE METAL CONDUIT
INST	INSTANTANEOUS
I/O	INPUT / OUTPUT SIGNALS
IP	INSTRUMENT PANEL
JB	JUNCTION BOX
K	KEY OR KIRK KEY INTERLOCK
kcmil	1000 CIRCULAR MILS
kV	KILOVOLTS
kVA	KILOVOLT-AMPERE
kVAR	KILOVOLT-AMPERE REACTIVE
kW	KILOWATT
kWh	KILOWATT-HOUR
LA	LIGHTING ARRESTER
LC	LOAD CENTER
LCP	LOCAL CONTROL PANEL
LFMC	LIQUID TIGHT FLEX METAL CONDUIT
LP-#	LIGHTING PANEL NUMBER #
LR	LOCAL/REMOTE OR LATCHING RELAY
LRA	LOCKED ROTOR AMPS
LS	LIMIT SWITCH
LTC	LIGHTING CONTACTOR
LTG	LIGHTING
LV	LOW VOLTAGE
M	MOTOR OR MOTOR CONTACTOR
MAS	MAINTENANCE ACCESS STRUCTURE
MA	MILLIAMPS
MAX	MAXIMUM
MBS	MANUAL BYPASS SWITCH
MC	METAL CLAD
MCA	MAXIMUM CIRCUIT AMPS
MCB	MAIN CIRCUIT BREAKER
MCC	MOTOR CONTROL CENTER
MDP	MAIN DISTRIBUTION PANEL
MERC	MERCURY VAPOR
MFG	MANUFACTURER
MFR	MULTI-FUNCTIONAL RELAY
MGB	MAIN GROUNDING BUS
MLO	MAIN LUGS ONLY
MOCP	MAXIMUM OVERCURRENT PROTECTION
MOV	MOTOR OPERATED VALVE
MPZ	MINI-POWER ZONE
MSC	MFR SUPPLIED CABLE
MTS	MANUAL TRANSFER SWITCH
MT	MOUNT
MTD	MOTOR TEMPERATURE DETECTOR
MV	MEDIUM VOLTAGE
N	NEUTRAL
NA	NOT APPLICABLE
NC	NORMALLY CLOSED
NEMA	NATIONAL ELEC. MFR. ASSOC.
NF	NON-FUSED
NIC	NOT IN CONTRACT
NO	NORMALLY OPEN
NP	NAMEPLATE
NTS	NOT TO SCALE
OC	OCCUPANCY CONTROL
OD	OUTSIDE DIAMETER
OL	OVERLOAD
OH	OVERHEAD
OWS	OPERATOR WORK STATION

ABBREVIATIONS

ABBR.	DESCRIPTION
P	POLE
PB	PULL BOX OR PUSH BUTTON
PC	PHOTOCELL
PCP	PROCESS CONTROL PANEL
PF	POWER FACTOR
PH	PHASE
PLC	PROGRAMMABLE LOGIC CONTROLLER
PMU	POWER MONITOR UNIT
PNL	PANEL
PP	POWER PANEL (480VAC)
PR	PAIR
PS	PRESSURE SWITCH
PT	POTENTIAL TRANSFORMER
PVC	POLYVINYL CHLORIDE CONDUIT
PWR	POWER
RCPT	RECEPTACLE
REF	REFERENCE
REQD	REQUIRED
RGS	RIGID GALVANIZED STEEL CONDUIT
RM	ROOM
RMS	ROOT MEAN SQUARE
RS	RIGID STEEL
RTD	RESISTANCE TEMPERATURE DETECTOR
RTU	REMOTE TELEMETRY UNIT
SA	SURGE ARRESTER
SC	SURGE CAPACITOR
SEC	SECONDARY
SEL	SELECTOR
SF	SUPPLY FAN
SH	SPACE HEATER
SLD	SINGLE LINE DIAGRAM
SMH	SIGNAL MAINTENANCE HOLE
S/N	SOLID NEUTRAL
SPEC	SPECIFICATIONS
SPD	SURGE PROTECTIVE DEVICE
SSRVS	SOLID STATE REDUCED VOLTAGE ST.
SST	STAINLESS STEEL
SUB	SUBSTATION
SV	SOLENOID VALVE
SW	SWITCH
SWBD	SWITCHBOARD
SWGR	SWITCHGEAR
SYM	SYMMETRICAL
SYS	SYSTEM
T	THERMOSTAT
TB	TERMINAL BLOCK
TDR	TIME DELAY RELAY
TEL	TELEPHONE
TEMP	TEMPERATURE
TJB	TERMINAL JUNCTION BOX
TS	THERMAL SWITCH
TSP	TWISTED SHIELDED PAIR
TVSS	TRANSIENT VOLTAGE SURGE SUPPR.
TYP	TYPICAL
UGE	UNDERGROUND ELECTRIC UTILITY
U/G	UNDERGROUND
UPS	UNINTERRUPTIBLE POWER SUPPLY
UVR	UNDERVOLTAGE RELAY
V	VOLT OR VOLTMETER
VA	VOLTAMPERE
VAR	VOLTAMPERE REACTIVE
VFD	VARIABLE FREQUENCY DRIVE
VS	VOLTMETER SWITCH
W	WATT
WHD	WATTHOUR DEMAND METER
WP	WEATHER PROOF
WW	WIREWAY
XFMR	TRANSFORMER
XMTR	TRANSMITTER
XP	EXPLOSION PROOF
Z	IMPEDANCE

ELECTRICAL PLAN/LAYOUT

SYMBOL	DESCRIPTION
	TERMINAL JUNCTION BOX
	ELECTRICAL EQUIPMENT
X	CEILING MOUNTED DOWNLIGHT LUMINAIRE - SEE SCHEDULE FOR TYPE
X	FLUORESCENT LUMINAIRE, SURFACE OR LAY IN TYPE SEE SCHEDULE FOR TYPE
X	LUMINAIRE AND POLE - SEE SCHEDULE FOR TYPE
X	WALL MOUNTED LUMINAIRE - SEE SCHEDULE FOR TYPE
	GROUND ROD - 5/8" x 20' COPPER CLAD UNLESS OTHERWISE NOTED
	GROUND ROD IN TEST WELL - 5/8" x 20' COPPER CLAD UNLESS OTHERWISE NOTED
X	EXIT LIGHTS - SOLID SECTION IS DIRECTION OF FACE SEE SCHEDULE FOR TYPE
X	EMERGENCY LIGHT WITH BATTERY PACK SEE SCHEDULE FOR TYPE
#	LIGHTING FIXTURE POWER AND SWITCHING LEGEND X = FIXTURE TYPE # = CIRCUIT NUMBER
[B2]	CONDUIT/CONDUCTOR - REFER TO CIRCUIT SCHEDULE
LPA-2	HOME RUN - PANEL AND CIRCUIT NUMBER SHOWN
	EXPOSED CONDUIT AND CONDUCTORS*
	UNDERGROUND CONDUIT AND CONDUCTORS*
YCX	YARD CONDUIT. REFER TO YARD CONDUIT SCHEDULE
DB	DIRECT BURIED CONDUIT
CDB	CONCRETE ENCASED DUCT BANK
	CONDUIT, STUBBED AND CAPPED AS SHOWN
	GROUND WIRE, 4/O CU UNLESS OTHERWISE NOTED
X #	WALL SWITCH: # - CIRCUIT NO. 2- DOUBLE POLE, 3- THREE WAY, 4- FOUR WAY, WP- WEATHERPROOF P- PILOT LIGHT, K- KEY OPERATED, D- DIMMER, CRE- CORROSION RESISTANT
X #	20A DUPLEX RECEPTACLE UNLESS SPECIFIED OTHERWISE WP - WEATHERPROOF, C - CLOCK HANGER TL - TWIST LOCK, CRE - CORROSION RESISTANT GFCI - GROUND FAULT INTERRUPTER, FTC - FULL TIME COVER
	20A QUADRAPLEX RECEPTACLE - UNLESS SPECIFIED OTHERWISE
	20A DUPLEX RECEPTACLE - UNLESS SPECIFIED OTHERWISE. LOCATED ABOVE COUNTER TOP
	20A DUPLEX RECEPTACLE - UNLESS SPECIFIED OTHERWISE. MOUNTED FLUSH IN FLOOR.
30	RECEPTACLE, SPECIAL PURPOSE - AMPERAGE AS INDICATED.
	TELEPHONE/DATA RECEPTACLE (OUTLET BOX, 18" AFF) W - WALL MOUNTED, 54" AFF
	TELEPHONE/DATA RECEPTACLE MOUNTED FLUSH IN FLOOR
J	JUNCTION BOX NEMA 12 ENCLOSURE UNLESS INDICATED OTHERWISE. 4X = NEMA 4X SS
F	FIRE ALARM PULL STATION
F	FIRE ALARM HORN/STROBE LIGHT
F	FIRE ALARM STROBE LIGHT
W	ELEVATOR WARNING LIGHT
SD HD	FIRE ALARM SMOKE OR HEAT DETECTOR
SD D	DUCT SMOKE DETECTOR
FACP	FIRE ALARM CONTROL PANEL
FAAP	FIRE ALARM ANNUNCIATOR PANEL
	CONDUIT CHASE
WH	WATER HEATER

ONE LINE DIAGRAMS, RISER DIAGRAMS AND SCHEMATICS

SYMBOL	DESCRIPTION
E	ELECTRICAL INTERLOCK
400 600	DRAWOUT CIRCUIT BREAKER, LOW VOLTAGE 600= FRAME RATING, 400=TRIP SETTING
400 600	DRAWOUT CIRCUIT BREAKER, MEDIUM VOLTAGE 600= FRAME RATING, 400=TRIP SETTING
600 400	DRAWOUT FUSED SWITCH, LOW OR MEDIUM VOLTAGE 600= FRAME RATING, 400=FUSE RATING
(3)	CURRENT TRANSFORMER, NUMBER OF WINDINGS INDICATED
XFMR DRY kVA 3P/4W 480-120/208V	TRANSFORMER, VOLTAGES, PHASE AND RATING INDICATED AS APPLICABLE
	LIGHTNING ARRESTER
	CAPACITOR OR SURGE CAPACITOR
X 0-600V	METER SCALE RANGE SHOWN IF REQUIRED PM - PHASE MONITOR, A - AMPS P - POWER METER, V - VOLTS
	FUSE
TVSS	TRANSIENT VOLTAGE SURGE SUPPRESSION
	GROUND
CPT 480V 120V	CONTROL TRANSFORMER
GFR	GROUND FAULT RELAY WITH C.T.
	PUSH-BUTTON SWITCH, MOMENTARY CONTACT, NORMALLY OPEN
	PUSH-BUTTON SWITCH, MOMENTARY CONTACT, NORMALLY CLOSED
	PUSH BUTTON SWITCH, MAINTAINED CONTACTS WITH MECHANICAL INTERLOCK
	REMOTE DEVICE
A	INDICATING LIGHT - LETTER INDICATES COLOR A - AMBER, G - GREEN B - BLUE, R - RED C - CLEAR, W - WHITE
A	PUSH TO TEST AND CONNECT INDICATING LIGHT SCHEMATIC DIAGRAMS ONLY A - AMBER, G - GREEN B - BLUE, R - RED C - CLEAR, W - WHITE
5	MOTOR, SQUIRREL CAGE INDUCTION UNLESS OTHERWISE NOTED - HORSEPOWER INDICATED
	OVERLOAD RELAY HEATER
1	MAGNETIC STARTER WITH NEMA SIZE INDICATED
M	MOTOR CIRCUIT PROTECTOR, MAGNETIC, 3 POLE UNLESS INDICATED OTHERWISE.
400	CIRCUIT BREAKER, THERMAL MAGNETIC TRIP SHOWN, 3 POLE UNLESS INDICATED OTHERWISE.
400 225	FUSED SWITCH, SWITCH AND FUSE CURRENT RATING INDICATED, 3 POLE UNLESS INDICATED OTHERWISE.
100	SWITCH - CURRENT RATING INDICATED, 3 POLE UNLESS INDICATED OTHERWISE.
60A 3P, 60A 3P	DISC SWITCH - FUSED, NON-FUSED
G or Y	GENERATOR

SYMBOL	DESCRIPTION
S_M	MANUAL MOTOR STARTER SWITCH, NEMA 4X UNLESS OTHERWISE NOTED. NUMBER OF POLES AS REQUIRED.
PB 4X	PUSH-BUTTON STATION, NEMA 12 ENCLOSURE UNLESS INDICATED OTHERWISE. 4X = NEMA 4X STAINLESS STEEL ENCLOSURE. SEE CONTROL DIAGRAMS FOR TYPE PUSH BUTTON REQUIRED.
30 4X	NONFUSED DISCONNECT SWITCH, SIZE INDICATED, 3 POLE UNLESS INDICATED OTHERWISE, NEMA 12 ENCLOSURE, 4X = NEMA 4X STAINLESS STEEL
F 40 60 4X	FUSED DISCONNECT SWITCH, SIZE INDICATED (60 = SWITCH RATING: 40 = FUSE RATING) 3 POLE UNLESS INDICATED OTHERWISE, NEMA 12 ENCLOSURE, 4X = NEMA 4X STAINLESS STEEL
LC 30 4X	LIGHTING CONTACTOR, CURRENT RATING INDICATED, NEMA 12 ENCLOSURE UNLESS INDICATED OTHERWISE. SEE CONTROL DIAGRAM FOR NUMBER OF POLES. 4X = NEMA 4X TYPE 316 STAINLESS STEEL
2 4X	MAGNETIC STARTER, NEMA SIZE INDICATED, NEMA 12 ENCLOSURE, UNLESS INDICATED OTHERWISE. SEE CONTROL DIAGRAM. 4X = NEMA 4X STAINLESS STEEL
2 4X	COMBINATION (FUSE OR CIRCUIT BREAKER AS INDICATED). MAGNETIC STARTER, NEMA SIZE INDICATED, NEMA 12 ENCLOSURE UNLESS INDICATED OTHERWISE. SEE CONTROL SCHEMATIC DIAGRAM. 4X = NEMA 4X STAINLESS STEEL
	ELECTRIC RESISTANCE HEATER
ETM	ELAPSED TIME METER
CRx	CONTACT - NORMALLY OPEN WITH COIL INDICATED
CRx	CONTACT - NORMALLY CLOSED WITH COIL INDICATED
CRx OR Rx LRx (L)	CONTROL RELAY, X = SEQUENTIAL NUMBER CONTROL RELAY, X=SEQUENTIAL NUMBER LATCHING RELAY, X=SEQUENTIAL NUMBER L - LATCH, U - UNLATCH
TDx NOTC	TIME DELAY RELAY, X=SEQUENTIAL NUMBER NOTC=NORMALLY OPEN TIMED CLOSED NOTO=NORMALLY OPEN TIMED OPEN AFTER CLOSE NCTO = NORMALLY CLOSED TIMED OPEN; NCTC = NORMALLY CLOSED TIMED CLOSED AFTER OPEN
	TEMPERATURE OPENS ON RISING TEMPERATURE, CLOSES ON FALLING TEMPERATURE
	CLOSES ON RISING TEMPERATURE, OPENS ON FALLING TEMPERATURE
H O A XOO OOX	SELECTOR SWITCH: MAINTAINED CONTACT WITH CONTACT POSITION INDICATED, CHART IDENTIFIES OPERATION

	POSITION		
CKT.	HAND	OFF	AUTO
1	X	O	O
2	O	O	X

X - CLOSED CONTACT
O - OPEN CONTACT

GENERAL

SYMBOL	DESCRIPTION
	CONNECTION POINT TO EQUIPMENT SPECIFIED, FURNISHED AND INSTALLED UNDER OTHER SECTIONS. RACEWAY, CONDUCTOR AND CONNECTION IN THIS SECTION.
1"C, 2#12, 1#12G 1"C, 1-25/C TYPE 1	INDICATES RACEWAY AND CIRCUIT CONDUCTORS. FIRST NUMBER IS RACEWAY SIZE. THE FOLLOWING NUMBERS ARE THE CONDUCTOR QUANTITIES, SIZES, AND TYPES.
	DEMOLITION TO BE REMOVED OR DELETED

NOTE:
* ALL UNMARKED CONDUIT RUNS CONSIST OF 2#12, 1#12G IN 3/4"C.

THIS IS A STANDARD LEGEND SHEET. SOME SYMBOLS OR ABBREVIATIONS MAY APPEAR ON THIS SHEET AND NOT BE UTILIZED ON PROJECT.

NO.	DATE	ISSUED FOR	BY

DESIGNED JMB
DRAWN JMB
CHECKED JCB
PROJ. ENGR. CLK

JOHN C. BURKE P.E.
No. 17301

Hazen
999 Ponce de Leon Boulevard, Suite 1150
Coral Gables, FL 33134
Certificate of Authorization Number: 2771

SCALE NA

CONTRACT: –
CLIENTS PROJECT: –
ENGINEERS PROJECT: 46016-016
CAD REFERENCE: 46016-006-E01

CITY OF HIALEAH
DEPARTMENT OF PUBLIC WORK

CITY OF HIALEAH
PUMP STATION 12 UPGRADES

ELECTRICAL LEGEND

DATE: MAY 2018
SHEET: 10 OF 14
DRAWING: E01

BID SET

PLOT DATE: 5/16/2018 8:41 AM BY: OKSH
XREFS= ..\Tblock\46016-006TB
File = O:\46016-000-HWD\46016-006\Drawings\PS 12 (2017)\New folder\Elec\46016-006-E01 Saved by jbroad Save date = 5/16/2018 8:22 AM

GENERAL ELECTRICAL NOTES:

ALSO SEE ADDITIONAL NOTES ON OTHER SHEETS

1. THE SCOPE OF WORK SHALL BE AS DESCRIBED IN SPECIFICATION SECTION 16010.

2. THE CONTRACTOR SHALL PROVIDE ALL MATERIALS AND LABOR TO INSTALL THE ELECTRICAL SYSTEMS AS INDICATED ON THE DRAWINGS. ITEMS NOT SHOWN BUT OBVIOUSLY NECESSARY FOR COMPLETION OF THE WORK SHALL BE INCLUDED.

3. THE INSTALLATION SHALL BE IN ACCORDANCE WITH THE MINIMUM FOLLOWING STANDARDS AND CODES:
   - 3.1. NATIONAL FIRE PROTECTION ASSOCIATION (NFPA)
   - 3.2. NATIONAL ELECTRICAL CODE (NEC), (NFPA 70 LATEST ADOPTED EDITION)
   - 3.3. NATIONAL ELECTRICAL SAFETY CODE, (NFPA 70E LATEST ADOPTED EDITION)
   - 3.4. STANDARD FOR FIRE PROTECTION IN WASTEWATER TREATMENT AND COLLECTION FACILITIES, (NFPA 820 LATEST ADOPTED EDITION)
   - 3.5. OTHER NFPA CODES AS APPLICABLE
   - 3.6. FLORIDA BUILDING CODE (FBC LATEST ADOPTED EDITION)
   - 3.7. LOCAL CODES, CITY CODES REQUIRED BY THE AUTHORITY HAVING JURISDICTION.
   - 3.8. AMERICAN NATIONAL STANDARDS INSTITUTE (ANSI)
   - 3.9. NATIONAL ELECTRICAL MANUFACTURERS ASSOCIATION (NEMA)
   - 3.10. INSTITUTE OF ELECTRICAL AND ELECTRONIC ENGINEERS (IEEE)
   - 3.11. INSULATED CABLE ENGINEERS ASSOCIATION (ICEA)
   - 3.12. OCCUPATIONAL SAFETY AHD HEALTH ACT (OSHA)
   - 3.13. AMERICAN SOCIETY FOR TESTING AND MATERIALS (ASTM)
   - 3.14. UNDERWRITERS LABORATORIES (UL) LISTING AND LABELING FOR ALL MATERIALS AND EQUIPMENT WHERE APPLICABLE STANDARDS EXIST

4. THE CONTRACTOR SHALL OBTAIN ALL NECESSARY PERMITS, INSPECTIONS AND APPROVALS AND TO INCLUDE ALL FEES AS PART OF HIS BID IF NOT OTHERWISE NOTED.

5. THE CONTRACTOR SHALL COORDINATE HIS WORK WITH THE ENGINEER AND OWNER.

6. THE CONTRACTOR SHALL, BEFORE SUBMITTING HIS BID, VISIT THE SITE OF THE PROJECT AND BECOME FAMILIAR WITH THE EXISTING CONDITIONS. NO ALLOWANCE WILL BE MADE FOR EXISTING CONDITIONS OR FAILURE OF THE CONTRACTOR TO OBSERVE THEM.

7. ELECTRICAL EQUIPMENT SHALL BE DEFINED AS ANY ELECTRICAL DEVICE USED IN CONJUNCTION WITH OTHER EQUIPMENT REQUIRING ELECTRICITY FOR OPERATION. THIS INCLUDES BUT IS NOT LIMITED TO: DISCONNECT SWITCHES, JUNCTION BOXES, PANELBOARDS, TRANSFORMERS, LIGHTING FIXTURES, MOTOR STARTERS, SWITCHGEAR, MOTOR CONTROL CENTERS, CONTROLS, LOCAL CONTROL PANELS.

8. IT IS THE CONTRACTOR'S RESPONSIBILITY TO COORDINATE WITH ALL LOCAL UTILITIES, INCLUDING THE POWER AND TELEPHONE UTILITIES TO MEET ALL OF THEIR INSTALLATION REQUIREMENTS. ALL FEES, LABOR, EQUIPMENT OR MATERIALS NECESSARY TO MEET THESE REQUIREMENTS IS TO BE INCLUDED IN THE BID. THE CONTRACTOR SHALL OBTAIN, DELIVER AND INSTALL ALL CONDUITS, PULL-BOXES AND EQUIPMENT AS REQUIRED BY THE UTILITIES TO THEIR SPECIFICATIONS. THE TELEPHONE UTILITY REPRESENTATIVE IS THE CITY'S TELEPHONE CONTRACTOR.

9. THE CONTRACTOR SHALL BE RESPONSIBLE FOR ALL CONDUIT AND WIRING INSTALLATION FOR ALL VENDOR PROVIDED EQUIPMENT (PACKAGE SYSTEMS). IF THE SHOP DRAWINGS DIFFER FROM THE DESIGNED FACILITIES, THE CONTRACTOR SHALL REDESIGN THE FACILITIES AND SUBMIT THE REVISED DESIGN FOR THE ENGINEER'S APPROVAL ALONG WITH THE SHOP DRAWINGS. THERE SHALL BE NO ADDITIONAL COST TO THE OWNER FOR THE REDESIGN NOR FOR ANY ADDITIONAL CONDUITS AND WIRING. DURING SUBMITTAL THE CONTRACTOR SHALL VERIFY ALL SUPPLIED BREAKER SIZES FOR ALL PACKAGED SYSTEMS SUCH AS HVAC, EXHAUST FANS, MIXERS, CHEMICAL PUMPS ETC. AND MODIFY ALL BREAKERS IN MCC'S AND PANELBOARDS ACCORDINGLY WITHOUT ANY ADDITIONAL COST TO THE OWNER.

10. ALL EQUIPMENT AND MATERIAL SHALL BE UNUSED AND U.L. LISTED. ALL REFERENCES TO A PARTICULAR MANUFACTURER ARE GIVEN ON AN "APPROVED EQUAL" BASIS.

11. ALL CONTROL PANELS SHALL BE CONSTRUCTED BY A UL 508A APPROVED PANEL VENDOR AND SHALL BEAR A UL 508A LABEL ON THE PANEL.

12. THE CONTRACTOR IS RESPONSIBLE TO TEST ALL SYSTEMS INSTALLED OR MODIFIED UNDER THIS PROJECT AND REPAIR OR REPLACE ALL DEFECTIVE WORK TO THE SATISFACTION OF THE ENGINEER AND OWNER.

13. ALL EQUIPMENT FURNISHED AND INSTALLED BY THE CONTRACTOR SHALL BE GUARANTEED AGAINST DEFECTS IN MATERIAL AND WORKMANSHIP FOR A PERIOD OF ONE YEAR FROM DATE OF ACCEPTANCE.

14. ALUMINUM CONDUCTORS SHALL NOT BE USED FOR THIS PROJECT.

15. SHOP DRAWINGS SHALL BE SUBMITTED FOR ALL ELECTRICAL & CONTROL EQUIPMENT AND MATERIAL.

16. THE DRAWINGS ARE NOT INTENDED TO SHOW THE EXACT LOCATION OF CONDUIT RUNS. THESE ARE TO BE COORDINATED WITH THE OTHER TRADES SO THAT CONFLICTS ARE AVOIDED PRIOR TO INSTALLATIONS.

17. ALL LOCATIONS OF EQUIPMENT, PANELS ETC. ARE SHOWN FOR ILLUSTRATION PURPOSES. CONTRACTOR SHALL VERIFY AND COORDINATE EXACT LOCATION AND SIZE WITH ALL SUBCONTRACTORS AND EQUIPMENT SUPPLIERS PRIOR TO ANY INSTALLATION AND THEN INSTALL AS SUCH WITH CORRESPONDING CONDUIT STUB-UPS.

18. SEE OTHER DISCIPLINE DRAWINGS FOR COORDINATION OF ALL EQUIPMENT. ANY CONFLICTS SHALL BE BROUGHT TO THE ENGINEER'S ATTENTION AND MOVEMENT OF CONDUITS OR OTHER ELECTRICAL EQUIPMENT SHALL BE ACCOMPLISHED WITHOUT ANY ADDITIONAL COST FOR THE OWNER.

19. LOCATIONS OF MANHOLES, HANDHOLES AND PULL BOXES ARE APPROXIMATE. CONTRACTOR SHALL COORDINATE EXACT LOCATION WITH EXISTING AND NEW PIPING OR CONDUITS AND ADJUST ACCORDINGLY.

20. NOT ALL CONDUITS SHOWN ON RISER AND SINGLE-LINE DIAGRAMS ARE SHOWN ON BUILDING LAYOUTS. CONTRACTOR SHALL SUPPLY ALL CONDUITS AND CABLES AS SHOWN ON RISERS AND SINGLE-LINE DIAGRAMS.

21. ALL CIRCUITS SHALL BE IDENTIFIED IN JUNCTION BOXES, PULL BOXES, CONTROL PANELS, PANELBOARDS, LIGHTING POLES, CONTROLLERS AND SERVICE POINTS. IDENTIFICATION SHALL MATCH PANELBOARD SCHEDULES.

22. EXPOSED RUNS OF CONDUITS SHALL BE INSTALLED WITH RUNS PARALLEL OR PERPENDICULAR TO WALLS, STRUCTURAL MEMBERS OR INTERSECTIONS OF VERTICAL PLANES AND CEILINGS, WITH RIGHT ANGLE TURNS CONSISTING OF SYMMETRICAL BENDS OR PULL BOXES AS INDICATED ON THE DRAWINGS. BENDS AND OFFSETS SHALL BE AVOIDED WHERE POSSIBLE.

23. INSTRUMENTATION IS LOW VOLTAGE SIGNALS SUCH AS 4-20MA, TELEPHONE COMMUNICATION, FIRE ALARM COMMUNICATION. POWER CONDUIT SHALL ONLY CROSS INSTRUMENTATION CONDUIT PERPENDICULARLY AT RIGHT ANGLES WITH 6" SEPARATION.

24. CONDUCTOR PULLING TENSIONS SHALL NOT EXCEED MANUFACTURER'S RECOMMENDATION. CONTRACTOR SHALL INSTALL PULL BOXES TO MEET MANUFACTURER'S REQUIREMENTS.

25. CONDUITS RUN IN PARALLEL: INSTRUMENTATION CONDUITS SHALL HAVE A MINIMUM SEPARATION FROM POWER CONDUITS AS INDICATED IN TABLE WHETHER CONCRETE ENCASED DUCT BANKS, DIRECT BURIED, SURFACE OR RACKS:

26.

	VOLTAGE	DISTANCE
26.1.	4160V	3 FT
26.2.	480V	2 FT
26.3.	120V	1 FT

27. ALL EXCAVATIONS FOR CONDUITS, HANDHOLES, MANHOLES AND PULLBOXES NEAR EXISTING PIPING, CONDUIT AND EQUIPMENT SHALL BE HAND EXCAVATED AND COORDINATED WITH PLANT ENGINEER.

28. MINIMUM DEPTH FROM TOP OF DUCT BANKS OR CONDUITS TO FINISHED GRADE SHALL BE 24" UNLESS OTHERWISE NOTED.

29. COLORED WARNING TAPE 6" WIDE SHALL BE INSTALLED 8" BELOW FINISHED GRADE DIRECTLY ABOVE ALL UNDERGROUND YARD CONDUITS ACCORDING TO THE FOLLOWING SCHEDULE:
   - 29.1. POWER: RED
   - 29.2. ALL OTHER CONDUITS: GREEN

30. CONTRACTOR SHALL RESTORE SIDEWALKS, ROADWAYS, SOD AND SPRINKLER SYSTEM PIPING TO MATCH EXISTING, AFTER THE COMPLETION OF THE CONDUIT AND PULLBOX INSTALLATION.

31. GROUNDING SHALL BE INSTALLED IN ACCORDANCE WITH NEC, ARTICLE 250. THE GROUNDING SYSTEM TEST SHALL NOT EXCEED A 48 HOUR SPAN DRY RESISTANCE OF 10 OHMS. ADDITIONAL GROUNDING TO MEET THIS REQUIREMENT SHALL BE INSTALLED AT NO EXTRA COST. GROUNDING AND BONDING CONNECTIONS SHALL NOT BE PAINTED. ALL GROUNDING CONNECTIONS SHALL BE EXOTHERMIC UNLESS SPECIFICALLY INDICATED OTHERWISE.

32. AN EQUIPMENT GROUND WIRE SIZED PER NEC SHALL BE PULLED IN ALL ELECTRICAL CONDUITS, POWER AND CONTROL, WHETHER OR NOT INDICATED ON THE PLANS.

33. ALL ENCLOSURES, TERMINAL JUNCTION BOXES, WIREWAYS, PULL BOXES ETC. SHALL CONTAIN A GROUNDING BUS. CONNECT ALL RACEWAY BONDS TO THIS BUS VIA GROUNDING BUSHINGS AND PROVIDE BONDING JUMPER FROM THIS BUS TO THE ENCLOSURE.

34. THE POWER AND SIGNAL SIDES OF ALL EXTERIOR INSTALLED INSTRUMENTATION SHALL HAVE SURGE PROTECTION AND SHALL BE GROUNDED, VIA A #6 AWG SOLID COPPER CONDUCTOR, TO A SEPARATE GROUND ROD AT EACH INSTRUMENT.

35. INSTRUMENTATION GROUND SHALL BE A #6 AWG COPPER CONNECTED TO THE GROUND GRID OR CONNECTED TO A DRIVEN GROUND. #6 GROUND WIRE SHALL BE INSTALLED IN CONDUIT WHERE EXPOSED. GROUND RODS SHALL BE 5/8" OR 3/4" BY A MINIMUM OF 20' IN LENGTH, AS INDICATED ON THE DRAWINGS.

36. CONTRACTOR SHALL INSTALL A POWER DISCONNECT SWITCH AT EACH 120V POWERED INSTRUMENT.

37. CONTRACTOR SHALL CORE DRILL EXISTING CONCRETE WALLS, FLOORS, MANHOLES, HAND HOLES AND PULL BOXES FOR CONDUIT PENETRATIONS. SEAL PENETRATIONS WITH NON-SHRINK GROUT OR APPROPRIATE FIRE RATED DEVICES WHERE APPLICABLE.

38. ALL CONDUITS PENETRATING RATED FIRE WALLS OR RATED FIRE FLOORS SHALL BE INSTALLED WITH U.L. APPROVED DEVICES AND OR FIRE RATED SEALING COMPOUND TO MAINTAIN THE FIRE RATING OF THE WALL OR FLOOR PENETRATED.

39. PROVIDE CONDUIT DUCT SEAL AT ALL CONDUIT ENDS.

40. ALL SPARE, ABANDONED, OR EMPTY CONDUITS SHALL BE SEALED WITH A CAP AT BOTH ENDS AND A PULL STRING INSTALLED WITH IDENTIFICATION OF OTHER END LOCATION AT BOTH ENDS.

41. ALL RECEPTACLES SHALL BE INSTALLED 18" AFF UNLESS OTHERWISE NOTED. LIGHT SWITCHES SHALL BE MOUNTED 48" AFF UNLESS OTHERWISE NOTED.

42. ALL RECEPTACLES WITHIN 6' OF A SINK SHALL BE GFI.

43. FLEXIBLE CONDUITS SHALL BE USED TO TERMINATE ALL MOTORS AND OTHER VIBRATING EQUIPMENT AND SHALL BE BETWEEN 18" AND 36" IN LENGTH.

44. TYPEWRITTEN AND LAMINATED PANEL SCHEDULES SHALL BE INSTALLED IN EACH PANELBOARD, AND TYPEWRITTEN TERMINAL BLOCK SCHEDULES IN EACH CONTROL CABINET.

45. SURGE PROTECTION DEVICES (SPD AKA TVSS) SHALL BE INTEGRAL TO NEW EQUIPMENT SHOWN AND SUPPLIED AS ONE UNIT AND ONE UL ENTITY.

46. CONTRACTOR SHALL PROVIDE AS PART OF THE ELECTRICAL SUBMITTAL, A LAYOUT OF THE ELECTRICAL ROOM SHOWING SIZES OF ALL EQUIPMENT INCLUDING LIGHTING, AND HVAC WITH THEIR SPATIAL RELATIONSHIPS.

47. BRANCH CIRCUITS EXCEEDING 100 FT IN LENGTH SHALL BE WIRED WITH MINIMUM #10 AWG COPPER WIRES. CONTRACTOR SHALL VERIFY REQUIRED WIRE SIZE WITH VOLTAGE DROP CALCULATIONS.

48. OUTDOOR LIGHTING FIXTURES SHALL BE COPPER FREE ALUMINUM.

49. CONTRACTOR SHALL BALANCE PANELBOARD LOADS AT THE END OF THE PROJECT.

50. ALL METALLIC CONDUITS BELOW GRADE TO A MINIMUM ELEVATION OF 12 INCHES ABOVE GRADE SHALL BE PVC COATED RIGID METAL CONDUIT (RMC).

51. ALL METALLIC CONDUITS 12 INCHES AND GREATER ABOVE GRADE SHALL BE RMC.

52. IF CONCRETE ENCASED DUCT BANKS INCLUDE POWER WITH ANY TYPE OF SIGNALS EXCEPT FIBER OPTIC CABLE, ALL CONDUITS SHALL BE METALLIC.

53. CONCRETE DUCT BANKS WITH POWER ONLY WIRING SHALL BE PVC UNLESS OTHERWISE NOTED ON THE DRAWINGS.

54. COPPER CONDUCTORS FOR POWER WIRING WITH A VOLTAGE GREATER THAN 240V TO GROUND SHALL BE XHHW-2. OTHER POWER WIRING SHALL BE EITHER XHHW OR THWN STRANDED COPPER WIRING.

55. ALL REFERENCES TO STAINLESS STEEL OR SS SHALL MEAN TYPE 316 STAINLESS STEEL UNLESS OTHERWISE NOTED.

56. ALL JUNCTIONS BOXES, LOCAL CONTROL PANELS, DISCONNECT SWITCHES AND INSTALLATION HARDWARE INSTALLED OUTDOORS SHALL BE 316 STEEL.

57. ALL ELECTRICAL EQUIPMENT IN DESIGNATED CORROSIVE AREAS SHALL BE NEMA 4X 316 STAINLESS STEEL OR NON-METALLIC.

58. CONTRACTOR SHALL PROVIDE RECORD DRAWINGS TO THE OWNER AND ENGINEER WITHIN 30 DAYS OF PUMP STATION ACCEPTANCE. THESE SHALL INCLUDE PER FBC EC C405.7.4.1:
   - 58.1. SINGLE LINE DIAGRAM OF THE PUMP STATION AND SITE ELECTRICAL SYSTEM
   - 58.2. PLAN VIEWS OF COMPLETE PUMP STATION

59. CONTRACTOR SHALL PROVIDE AN OPERATION AND MAINTENANCE MANUAL PER FBC EC C405.7.4.2 INCLUDING:
   - 59.1. SUBMITTAL DATA STATING EQUIPMENT RATING AND SELECTED OPTION FOR EACH PIECE OF EQUIPMENT REQUIRING MAINTENANCE.
   - 59.2. OPERATION AND MAINTENANCE MANUALS FOR EACH PIECE OF EQUIPMENT REQUIRING MAINTENANCE. REQUIRED ROUTINE MAINTENANCE ACTIONS SHALL BE CLEARLY IDENTIFIED
   - 59.3. NAMES AND ADDRESSES OF AT LEAST ONE QUALIFIED SERVICE AGENCY

60. CONTRACTOR SHALL PROVIDE SIGNAGE PER NEC 110.24 AND 702.7 AT THE SERVICE ENTRANCE EQUIPMENT VIA A STAINLESS STEEL PLACARD, AFFIXED TO THE SERVICE DISCONNECT.

61. CONTRACTOR SHALL PROVIDE SIGNAGE PER NFPA 110 FOR THE EMERGENCY SHUT-OFF BUTTON LOCATED ON THE NORTH EAST OUTSIDE CORNER OF THE ELECTRICAL BUILDING.

62. CONTRACTOR SHALL PROVIDE SIGNAGE PER NFPA 704 FOR THE FUEL SUPPLY.

63. ELECTRIC MOTORS SHALL HAVE MINIMUM NOMINAL EFFICIENCY AS SPECIFIED IN FBC EC 505.7.5, TABLE 505.7.5.

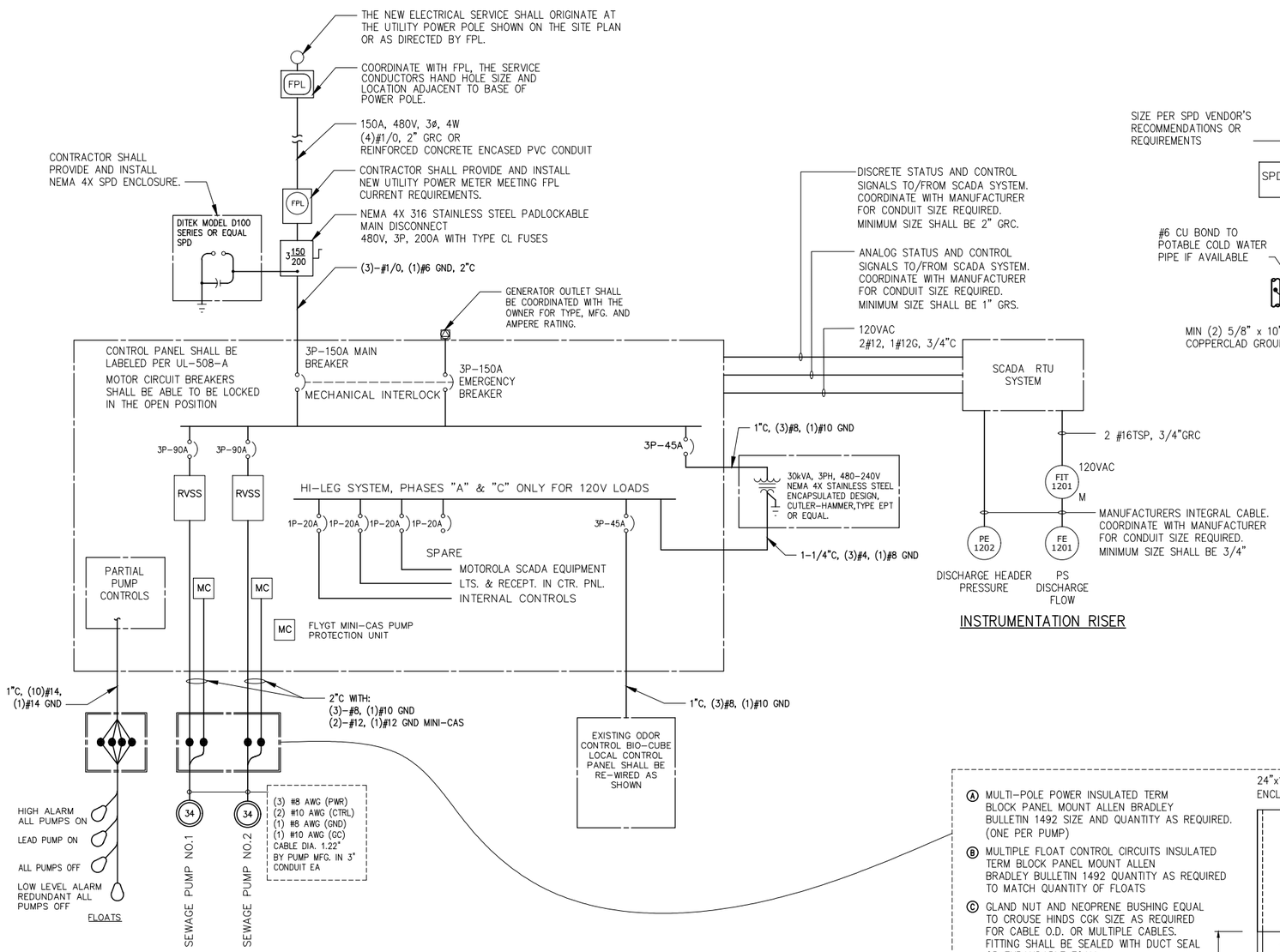

ELECTRICAL RISER DIAGRAM

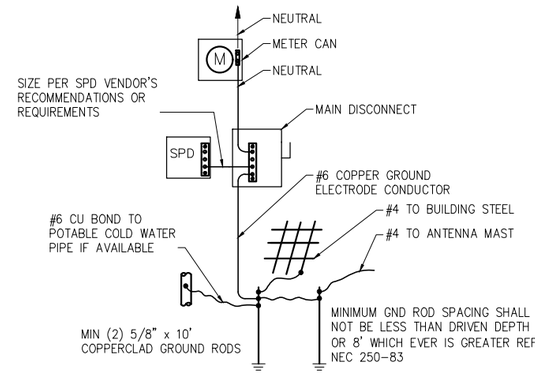

GROUNDING RISER

INSTRUMENTATION RISER

CITY OF HIALEAH 480V PUMP STATION PS-12					
STATION ID	FPL SERVICE REP	FPL REP PHONE	FPL AVAILABLE FAULT CURRENT	FLOW METER	PRESSURE TRANSDUCER
PS 12	MARCO MOVILLA	305 599-4078		1#16TSP, 3/4"C 2#12, 1#12G, 3/4"C	1#16TSP, 3/4"C
CONTRACTOR SHALL CONFIRM CONDUIT, WIRING, BREAKERS, MOTOR STARTERS SIZING WITH EQUIPMENT VENDORS.					

NOTES:

1. SOME EQUIPMENT IS POWERED BY 120/240VAC WHICH MAY INCLUDE A HIGH LEG TO GROUND VOLTAGE GREATER THAN 120V. CONTRACTOR SHALL WIRE AND MARK ALL HIGH LEG TERMINATIONS ACCORDING TO NEC 110.15, 230.56, 408.3(E), AND 408.3(F).
2. PUMP STATION WET WELL IS CLASSIFIED AS A CLASS 1 DIVISION 1 HAZARDOUS LOCATION. CONDUITS AND WIRING SHALL BE INSTALLED PER NEC 501 AND ASSOCIATED SECTIONS.
3. ALL ELECTRICAL PROTECTIVE EQUIPMENT SHALL HAVE A 10kAIC MINIMUM RATING.

Ⓐ MULTI-POLE POWER INSULATED TERM BLOCK PANEL MOUNT ALLEN BRADLEY BULLETIN 1492 SIZE AND QUANTITY AS REQUIRED. (ONE PER PUMP)

Ⓑ MULTIPLE FLOAT CONTROL CIRCUITS INSULATED TERM BLOCK PANEL MOUNT ALLEN BRADLEY BULLETIN 1492 QUANTITY AS REQUIRED TO MATCH QUANTITY OF FLOATS

Ⓒ GLAND NUT AND NEOPRENE BUSHING EQUAL TO CROUSE HINDS CGK SIZE AS REQUIRED FOR CABLE O.D. OR MULTIPLE CABLES. FITTING SHALL BE SEALED WITH DUCT SEAL OR EXPANDABLE FOAM.

Ⓓ FIELD PUNCH (1/2") DRAIN HOLES AND PROVIDE INSECT SCREEN

Ⓔ CONDUIT SEAL

Ⓕ CONTROL PANEL FOUNDATION

24"x18"x8" MINIMUM, NEMA 4X 316SS ENCLOSURE W/HINGED BOLT-ON COVER. (1)

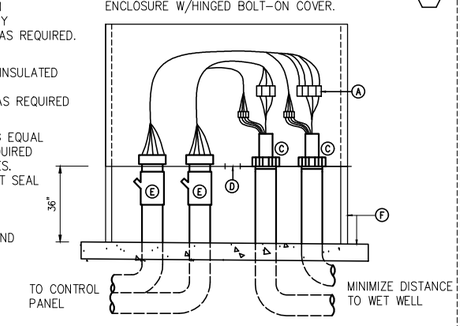

PUMPS MOTOR CONNECTION BOX

DETAIL 1A
N.T.S. –

18"x18"x8" MINIMUM, NEMA 4X 316SS ENCLOSURE W/HINGED BOLT-ON COVER. (1)

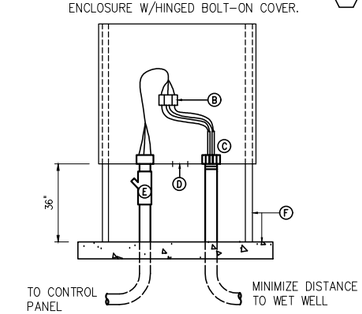

FLOATS CONNECTION BOX

DETAIL 1B
N.T.S. –

(1) SHOWN ARE EXAMPLE CONNECTION BOXES FOR A SINGLE POWER CABLE TYPE DUPLEX PUMP STATION. TRIPLEX PUMP STATIONS AND LARGER DUPLEX PUMP STATIONS WILL REQUIRE ADDITIONAL CONDUITS AND ASSOCIATED INCREASE OF ENCLOSURES SIZES.

CONNECTION BOXES SHALL BE SIZED AND CONFIGURED FOR TOTAL NUMBER OF CONDUITS REQUIRED AS COORDINATED WITH PUMP VENDOR. SOME PUMP VENDORS REQUIRE ADDITIONAL CONDUITS FOR CONTROL CIRCUITS.

NO.	DATE	ISSUED FOR	BY

DESIGNED JMB
DRAWN JMB
CHECKED JCB
PROJ. ENGR. CLK

JOHN C. BURKE P.E.
No. 17301

Hazen
999 Ponce de Leon Boulevard, Suite 1150
Coral Gables, FL 33134
Certificate of Authorization Number: 2771

SCALE NA

CONTRACT: –
CLIENTS PROJECT: –
ENGINEERS PROJECT: 46016-016
CAD REFERENCE: 46016-006-E03

CITY OF HIALEAH
DEPARTMENT OF PUBLIC WORKS

CITY OF HIALEAH
PUMP STATION 12 UPGRADES

ELECTRICAL RISER DIAGRAMS

DATE: MAY 2018
SHEET: 12 OF 14
DRAWING: E03

BID SET

PLOT DATE: 5/16/2018 8:42 AM BY: OKSH

XREFs= ..\Tblock\46016-006TB

File = O:\46016-000-HWD\46016-006\Drawings\PS 12 (2017)\New folder\Elec\46016-006-E03 Saved by jbroad Save date = 5/16/2018 8:22 AM

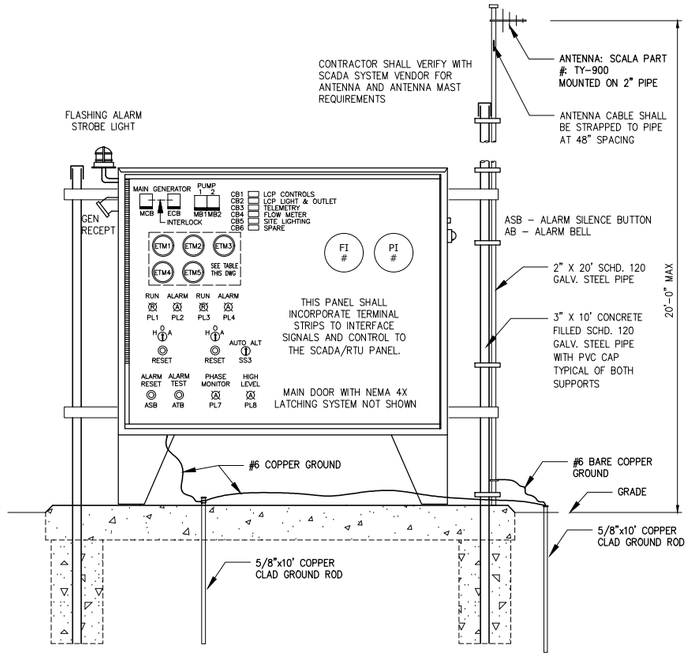

DEADFRONT VIEW WITH ANTENNA MAST DETAIL

1. COORDINATE, WITH OWNER, GENERATOR RECEPTACLE TYPE AND MODEL TO MATCH EXISTING PLUGS
2. SEE MECHANICAL DRAWINGS FOR EQUIPMENT LAYOUT

PS–12 SERVICE LOAD CALCULATIONS

LOAD DESCRIPTION	CONNECTED kVA	CONNECTED AMPS	OPERATING kVA	OPERATING AMPS
PUMP NO. 1 @ 34HP (26kW)	34	**40.9**	**27.2**	**32.7**
PUMP NO. 2 @ 34HP (26kW)	34	**40.9**		
AUXILIARY LOADS – TRANSFORMER	30.0	**36.1**	**21.0**	**25.3**
25% OF LARGEST PUMP LOAD		**10.2**		**10.2**
kVA TOTALS:	**98.0**		**48.2**	
AMPS TOTALS @ 480V, 3PH		**128.2**		**68.2**

PS–12 AVAILABLE FAULT CURRENT CALCULATIONS

DESCRIPTION	VOLTS	PHASE	kVA	IMP %	FAULT
CALCULATED OCT 2017					
UTILITY TRANSFORMER	480	3	112	.0363	**3711**
MOTOR CONTRIBUTION	480	3	68	.25	**327**
TOTAL FAULT AMPS					**4038**

NOTE: FOR CALCULATION PURPOSES, 1 HP = 1 kVA
THE TOTAL AVAILABLE FAULT CURRENTS SHOWN ARE BASED ON A FPL INFINITE BUS. ACTUAL VALUES WILL BE LESS THAN THOSE SHOWN.

PS–12 VOLTAGE DROP CALCULATIONS

ID	VOLTS	PHASE	AWG	LENGTH 1 WAY	AMPS AT LOAD	OHM 1K FT	VD %	VOLTS AT LOAD
SERVICE / FEEDER	480	3	1/0	100	80	0.13	**1.80**	**478**
MOTOR BRANCH	480	3	3	50	40	0.23	**0.80**	**479**
ODOR CONTROL	480	3	8	100	24	0.69	**2.87**	**477**
AUX EQPT BRANCH	120	1	12	30	15	1.7	**1.53**	**118**

NOTE: THE LENGTHS ARE WORST CASE CONDITIONS

120V SCHEDULE SHOWN FOR GENERAL INFO ONLY. SHOWN BELOW ARE THE MINIMUM CIRCUIT BREAKERS REQUIRED AND ARE AN INTEGRAL PART OF THE FACTORY ASSEMBLED PUMP LOCAL CONTROL PANEL.

CKT	DESCRIPTION	VA	BKR	WIRES	CONDUIT
CB1	LEVEL CONTROL PANEL (LCP)	400	1P–20A	2–#12, 1–#12 GND	INTERNAL
CB2	LCP LIGHTS AND GFCI RECEPTACLE	360	1P–20A	2–#12, 1–#12 GND	INTERNAL
CB3	SCADA (TELEMETRY)	440	1P–20A	2–#12, 1–#12 GND	3/4" PVC
CB4	FLOW METER	360	1P–20A	2–#12, 1–#12 GND	3/4" PVC
CB5	FUTURE SITE LIGHTING	360	1P–20A	NA	
CB6	SPARE	780	1P–20A	NA	
	TOTAL	**2700**			

PS–12 ELAPSED TIME RECORDERS

DUPLEX STATION FUNCTION	RECORDER
PUMP 1 RUNNING	ETM1
PUMP 2 RUNNING	ETM2
PUMPS 1 & 2 RUNNING SIMULTANEOUSLY	ETM3
PUMP 1 RUNNING DURING AGENCY SELECTED TIME OF DAY RANGE	ETM4
PUMP 2 RUNNING DURING AGENCY SELECTED TIME OF DAY RANGE	ETM5

NOTES:

1. ELECTRICAL SERVICE SHALL COMPLY WITH FPL STANDARDS SEE MECHANICAL DWGS. FOR LOCATION AND INSTALLATION DETAILS.
2. CONTRACTOR SHALL OBTAIN AND VERIFY AVAILABLE FAULT CURRENT WITH FPL. MINIMUM INTERRUPTING CAPACITY OF THE ELECTRICAL EQUIPMENT SHALL BE GREATER THAN SHOWN ON TABLE OR GREATER THAN VALUE FROM FPL.
3. CONTRACTOR SHALL PROVIDE, INSTALL, AND TERMINATE ALL CONTROL, SIGNAL AND POWER WIRING WITH ASSOCIATED CONDUITS. TELEMETRY STATUS SIGNALS AND CONTROL SIGNALS SHALL BE LOOP TESTED BACK TO THE BASE STATION AFTER ALL UPGRADES ARE COMPLETE.
4. CONTRACTOR SHALL COORDINATE WITH THE PUMP LEVEL CONTROL PANEL VENDOR TO DETERMINE WHETHER OR NOT TO INCORPORATE THE SCADA EQUIPMENT WITHIN THE PANEL OR PROVIDE SEPARATE ENCLOSURE.
5. ALL OTHER TELEMETRY COMPONENTS, e.g. ANTENNA, MAST, CABLING, GROUNDING AND OTHER APPURTENANCES REQUIRED FOR A COMPLETE SYSTEM SHALL BE PROVIDED AND INSTALLED BY THE CONTRACTOR AS COORDINATED WITH THE SCADA VENDOR.
6. CONTRACTOR SHALL UPGRADE THE EXISTING SCADA SYSTEM BASE STATION SCREEN DISPLAYS, HISTORICAL RECORDING AND REPORT GENERATION AS REQUIRED TO REFLECT EXISTING AND NEW EQUIPMENT AT THE SITE.
7. THE CONTRACTOR SHALL PROVIDE A MINIMUM OF TWO WEEKS NOTICE TO THE OWNER WHEN THE STATION IS COMPLETE, OPERATIONAL AND THE TELEMETRY SYSTEM IS READY FOR DEMONSTRATING AND TESTING.
8. MOTOR CIRCUIT BREAKERS SHALL BE CAPABLE OF BEING PADLOCKED IN THE OPEN POSITION WITH LOCKS NOT OBSTRUCTING THE CLOSING OF DOOR.
9. MOTOR WIRES SHOWN ARE MOTOR POWER AND GROUND ONLY.
10. ALL SIGNAL AND CONTROL WIRING FOR MOTORS AND AUXILIARY EQUIPMENT SHALL BE INCLUDED.
11. THE WET WELL IS CLASSIFIED AS A CLASS I DIVISION 1 GROUP "D" HAZARDOUS LOCATION.
12. SUBMERSIBLE PUMP CABLES AND FLOAT CABLES SHALL BE LISTED FOR CLASS 1, DIVISION 1, GROUP D HAZARDOUS LOCATIONS.
13. PUMP CONTROL PANEL ASSEMBLY SHALL BE MANUFACTURED AND LABELED PER UL 508A OR UL 698A AS REQUIRED.
14. MAIN DISCONNECT SWITCH SIZED TO MATCH MAIN CIRCUIT BREAKER AND IN A LOCKABLE NEMA 3R–316 STAINLESS STEEL ENCLOSURE.
15. THE PUMP CONTROL PANEL SHALL INCORPORATE AN INTRUSION SWITCH THAT ACTIVATES AN ALARM TO THE SCADA WHENEVER THE PANEL IS OPENED.
16. BOND ALL METALLIC COMPONENTS TO SYSTEM GROUND.
17. ALL INDICATOR LAMPS SHALL BE OF THE HIGH BRIGHTNESS LED TYPE AND INCLUDE PUSH TO TEST OR HAVE AN "ALL LAMP" TEST BUTTON.
18. ALL STARTERS AND CONTACTORS SHALL BE NEMA RATED
19. ALL EXISTING ELECTRICAL EQUIPMENT SHALL BE DEMOLISHED AND REMOVED FROM THE SITE. EXISTING EQUIPMENT THAT THE OWNER WANTS TO KEEP SHALL BE DELIVERED TO THE SITE DESIGNATED BY THE OWNER.
20. SEE SPECIFICATIONS FOR ADDITIONAL DETAILS AND REQUIREMENTS.
21. THE LCP SHALL HAVE 316 S.S. SUNSHIELDS MOUNTED ON 1 INCH MINIMUM STANDOFF STUDS ON FRONT, BACK, TOP AND BOTH SIDES. ACCESS HOLES AS REQUIRED FOR DEVICES PENETRATING THE SUN SHIELDS.
22. ADDITIONAL NOTES ON DRAWING E04
23. CONTRACTOR SHALL MEASURE THE GROUND RESISTANCE TO ASSURE IT IS LESS THAN OR EQUAL TO 10 OHMS.

CONTROL STRATEGY

1. PUMPS SHALL BE CONTROLLED VIA FLOATS. NORMAL OPERATION SHALL LIMIT OPERATING PUMPS TO TOTAL PUMPS MINUS ONE OPERATING AND ONE STANDBY.
2. EMERGENCY OPERATION SHALL BE TIED TO THE HIGH LEVEL FLOAT AND SHALL OPERATE ALL NORMALLY OPERATING PUMPS.
3. PUMPS SHALL BE SHUT DOWN ON FALLING LEVEL IN SAME ORDER AS STARTED.
4. ALL PUMPS SHALL BE CONTROLLABLE FROM THE BASE STATION HMI.
5. SEE SPECIFICATIONS FOR ADDITIONAL DETAILS
6. CONTROL DESIGN AND SCHEMATIC SHALL BE BY PANEL VENDOR AND SHALL CONFORM TO OWNER'S CURRENT REQUIREMENTS AND CONDITIONS. BASE STATION SCREEN DISPLAYS AND CONTROLS SHALL BE UPDATED AS REQUIRED.

ELAPSED TIME RECORDERS NOTES:

1. THE LCP SHALL CONTAIN ELAPSED TIME RECORDERS AND AN ASSOCIATED TIME CLOCK AS SHOWN IN THE TABLES. FOR A TRIPLEX PUMP STATION, ETM5, ETM6, AND ETM7 SHALL BE ACTIVATED BY AN ADJUSTABLE TIME CLOCK TO RECORD ONLY DURING THE TIME CLOCK ON DURATION RANGE.
2. FOR A DUPLEX PUMP STATION, ETM4 AND ETM5 SHALL BE ACTIVATED BY AN ADJUSTABLE TIME CLOCK TO RECORD ONLY DURING THE TIME CLOCK ON DURATION RANGE.
3. INITIALLY SETTINGS FOR RECORDING SHALL BE 12AM–5AM OR AS DIRECTED BY THE AGENCY.

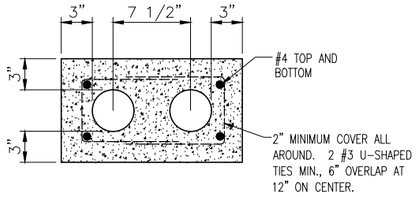

2-WAY DUCTBANK SHOWN

NOT TO SCALE
DUCT BANKS WITH MORE CONDUITS SHALL HAVE THE SAME RELATIVE SPACINGS.
REBAR CAGE SHALL BE ENLARGED AS REQUIRED.

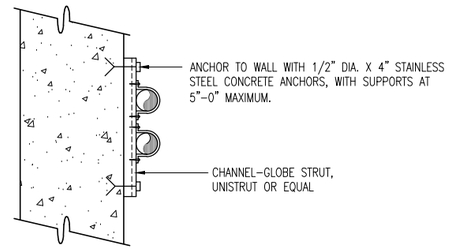

CONDUIT SUPPORT

NOT TO SCALE

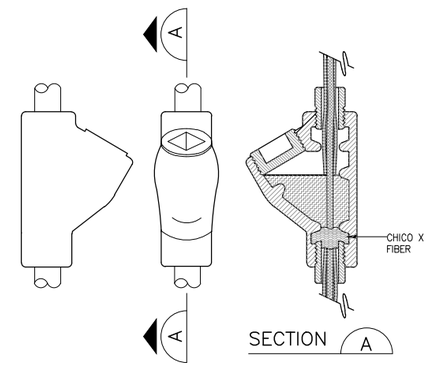

CONDUIT SEAL

NOTE: THIS STYLE SHOWN FOR INTENT. OTHER STYLES MAY BE CONSIDERED AS APPROPRIATE

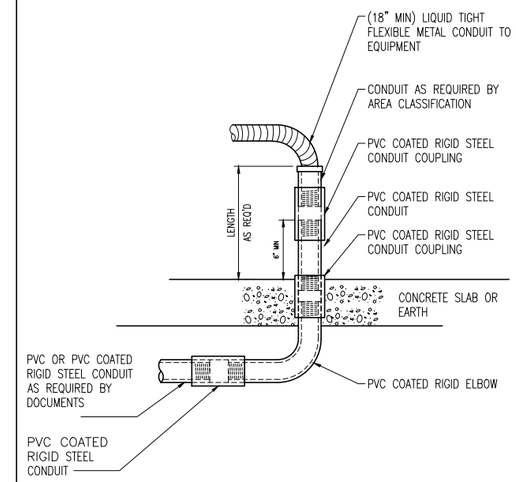

CONDUIT TRANSITIONS ABOVE AND BELOW GRADE

NOT TO SCALE

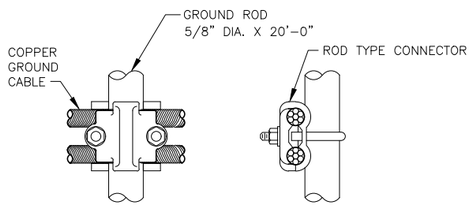

CABLE TO ROD CONNECTION

NOT TO SCALE

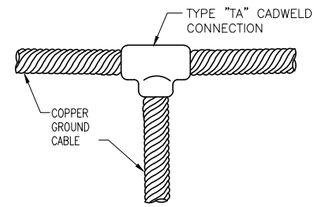

GROUND CABLE CONNECTION

NOT TO SCALE

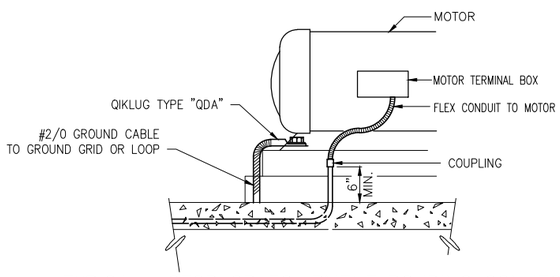

TYPICAL MOTOR OR EQUIPMENT BONDING CONNECTION

SEE CONDUIT TRANSITIONS ABOVE AND BELOW GRADE DETAIL THIS SHEET

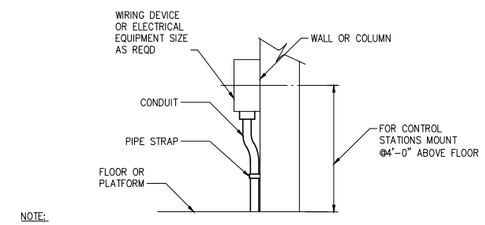

NOTE:

ALL MOUNTING HARDWARE SHALL BE STAINLESS STEEL. ON CONCRETE WALLS, USE STAINLESS STEEL INSERTS, MOUNT ENCLOSURE ON 1/4" SPACERS OF 1/2" RIGID CONDUIT.

WALL OR COLUMN MOUNTED DEVICE

NOT TO SCALE

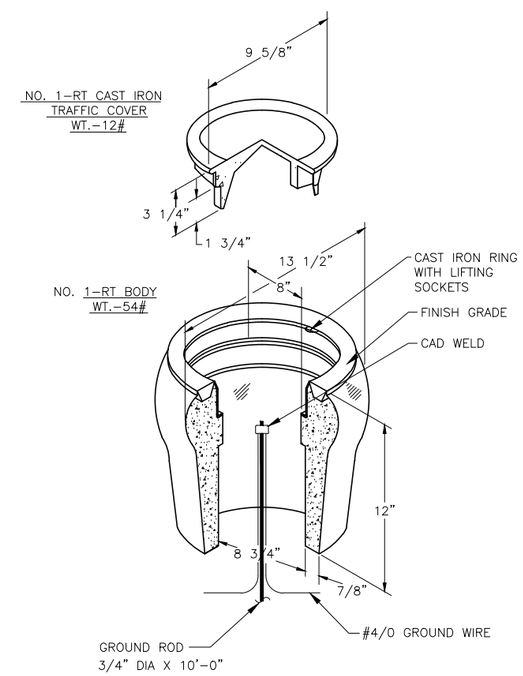

GROUND ROD DETAIL

NOT TO SCALE

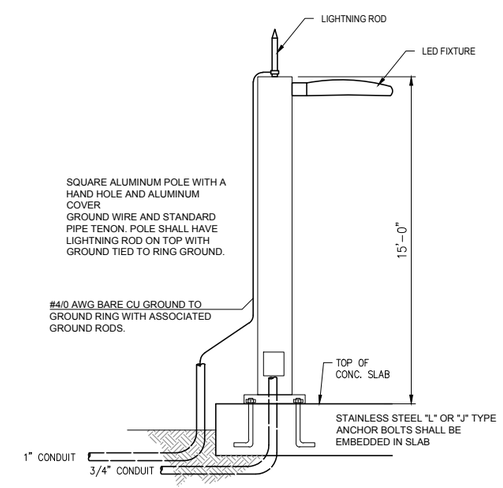

15' LIGHT POLE (F)

ALL POLE INSTALLATIONS SHALL BE SUITABLE FOR 140 MPH WIND WITH APPROPRIATE GUST FACTOR PER APPLICABLE ZONE OF INSTALLATION AS DEFINED IN THE FLORIDA BUILDING CODE. THE CONTRACTOR SHALL INCLUDE WITH THE SHOP DRAWING SUBMITTAL POLE WIND LOADING CALCULATIONS SIGNED & SEALED BY A STRUCTURAL ENGINEER REGISTERED IN FLORIDA SHOWING THAT THE PROPOSED INSTALLATION WILL MEET THE GIVEN WIND LOADING REQUIREMENT.

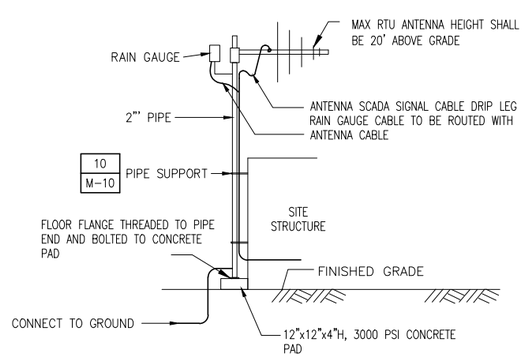

RTU ANTENNA WITH RAIN GAUGE INSTALLATION

NOT TO SCALE

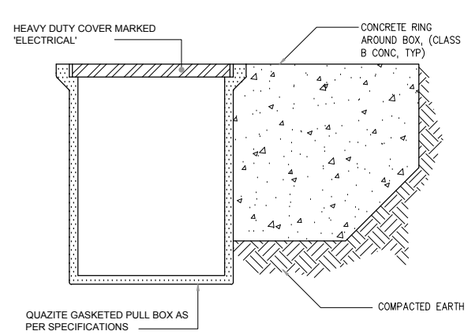

PULL BOX OR HAND HOLE INSTALLATION

NOT TO SCALE

NO.	DATE	ISSUED FOR	BY

DESIGNED JMB
DRAWN JMB
CHECKED JCB
PROJ. ENGR. CLK

JOHN C. BURKE P.E.
17301

Hazen
999 Ponce de Leon Boulevard, Suite 1150
Coral Gables, FL 33134
Certificate of Authorization Number: 2771

SCALE NA

CONTRACT: –
CLIENTS PROJECT: –
ENGINEERS PROJECT: 46016-016
CAD REFERENCE: 46016-006-E05

CITY OF HIALEAH
DEPARTMENT OF PUBLIC WORK

CITY OF HIALEAH
PUMP STATION 12 UPGRADES

ELECTRICAL DETAILS

DATE: MAY 2018
SHEET: 14 OF 14
DRAWING: E05

BID SET

PLOT DATE: 5/16/2018 8:45 AM BY: OKISH
XREFs= ..\Tblock\46016-006TB
File = Q:\46016-000-HWD\46016-006\Drawings\PS 12 (2017)\New folder\Elec\46016-006-E05 Saved by jbroad Save date = 5/16/2018 8:22 AM