ADDENDUM NO. 3

CITY OF HIALEAH
MULTIPURPOSE ADULT CENTER AT 300 UNIT ELDERLY HOUSING COMPLEX
2656 W. OKEECHOBEE RD.
HIALEAH, FLORIDA

MARCH 26, 2013

TO ALL CONCERNED

The original Contract Documents, for the Project entitled CITY OF HIALEAH – MULTIPURPOSE ADULT CENTER AT 300 UNIT ELDERLY HOUSING COMPLEX-ELECTRICAL AND FIRE ALARM-BID NO. 2012/13-3230-00-030 is hereby amended as noted in this Addendum No. 3.

This **Addendum No. 3** consists of **1** Typed Pages, **0** Sketch, **0** Attachments and **2** Drawings. All other items and conditions of the original Contract Documents shall remain unchanged. This Addendum shall become a part of the Contract Documents.

Approved for issue: _____ Date: March 26, 2013
Carlos Lopez – Acting Purchasing Director

ACKNOWLEDGEMENT

Receipt of this **Addendum No. 3** shall be acknowledged in the space provided on the ADDENDUM RECEIPT FORM (ARF) (copy attached) now a part of the Contract Documents and to be faxed immediately to City of Hialeah @ (305) 687-2642 and submitted with sealed bids.

IN THE CONTRACT DOCUMENTS:

DRAWINGS:

E1.00-SYMBOL LEGENDS AND NOTES revised 3/20/13
E5.01-RISER DIAGRAMS revised 3/20/13

ELECTRICAL AND FIRE ALARM BID #2012/13-3230-00-030

END OF ADDENDUM NO. 3

ADDENDUM RECEIPT FORM

CITY OF HIALEAH
MULTIPURPOSE ADULT CENTER AT 300 UNIT ELDERLY HOUSING COMPLEX
2656 W. OKEECHOBEE RD.
HIALEAH, FLORIDA

CONTRACTOR'S NAME _____

ADDRESS _____

PHONE NO._____**FAX NO.**_____

CONTACT NAME_____**SIGNATURE**_____

THE BIDDER ACKNOWLEDGES RECEIPT OF THE FOLLOWING ADDENDUM BY SIGNING AND DATING BELOW: (COPY OF THIS FORM MUST BE FAXED AND IMMEDIATELY TO CITY of HIALEAH @ (305) 687-2642 AND SUBMITTED WITH THE BID.

ADDENDUM	SIGNATURE	DATE
3		

ELECTRICAL AND FIRE ALARM BID #2012/13-3230-00-030

ARF

GENERAL ELECTRICAL NOTES

A. GENERAL

A1 . ALL WORK SHALL BE DONE IN ACCORDANCE WITH THE 2008 NATIONAL ELECTRICAL CODE (N.E.C.), AND 2010 FLORIDA BUILDING CODE.

A2 . THE CONTRACTOR IS RESPONSIBLE FOR EVALUATING FIELD CONDITIONS BY VISITING THE SITE PRIOR TO COMMENCING/BIDDING WORK.

A3 . ALL MATERIALS SHALL BE U.L. LISTED.

A4 . ALL BRANCH CIRCUITS SHALL BE PROPERLY PHASE BALANCED.

A5 . CONTRACTOR SHALL SEAL ALL FLOOR/WALL OPENINGS WITH A UL LISTED FIRE RATED SEAL TO MATCH THE FLOOR/WALL RATING.

A6 . RISERS ARE DIAGRAMMATIC ONLY. THEY DO NOT SHOW EVERY BEND REQUIRED FOR THE INSTALLATION.

A7 . THIS DRAWING IS A GUIDE FOR THE INSTALLATION OF ELECTRICAL SERVICE. THE ELECTRICAL CONTRACTOR IS RESPONSIBLE TO PROVIDE A FULLY FUNCTIONING SYSTEM.

A8 . ALL PULL AND JUNCTION BOXES SHALL BE ACCESSIBLE AT ALL TIMES.

A9 . EXACT POINT AND METHODS OF CONNECTION SHALL BE DETERMINED IN FIELD.

A10. ALL WORK SHALL BE DONE IN A NEAT AND WORKMANLIKE MANNER.

A11. A/C EQUIPMENT WIRING, BREAKER AND FUSE SIZES ARE BASED ON A/C EQUIPMENT SPECIFIED ON CONTRACT DRAWINGS. CONTRACTOR SHALL VERIFY WITH ACTUAL A/C EQUIPMENT NAMEPLATE AND CONFORMOATE DISCREPANCIES TO CONSTRUCTION MANAGER/ENGINEER RESPONSIBLE.

A12. CONTRACTOR SHALL COORDINATE ALL HIS WORK WITH OTHER TRADES IN ORDER TO FURNISH AND INSTALL ALL CONTROL WIRING AND RACEWAYS, ALL POWER CONTROL CIRCUITS WIRING AND RACEWAYS AS SHOWN ON THE AIR CONDITIONING DRAWINGS OR SPECIFICATIONS. IF AIR CONDITIONING DRAWINGS REFER TO MANUFACTURER'S WIRING DIAGRAMS, THE CONTRACTOR SHALL VERIFY WITH SAID MANUFACTURER ALL REQUIREMENTS AND INCLUDE ALL RELATED WORK IN HIS CONTRACT.

A13. ALL DATA EQUIPMENT TO BE FED BY A DEDICATED CIRCUIT CONSISTING OF A POWER CIRCUIT THAT FEED THIS TYPE OF EQUIPMENT ONLY SHALL BE PROVIDED WITH A SEPARATE GREEN GROUNDING CONDUCTOR CARRIED ALL THE WAY BACK TO THE PANEL AND CONNECTED TO THE GROUNDING SYSTEM.

A14. OTHER TRADE'S CONTROL DEVICES AND WIRING ARE NOT SHOWN ON ELECTRICAL DRAWINGS COORDINATE WITH GENERAL CONTRACTOR AND OTHER TRADE CONTRACTOR FOR SPECIFIC REQUIREMENTS.

A15. CONTRACTOR SHALL COORDINATE AND PARTICIPATE IN FINAL OPERATIONAL TESTING OF ALL SYSTEMS WITH NEW BUILDING(S) CONTRACTOR(S) (IF DIFFERENT CONTRACTOR), OWNER'S REPRESENTATIVES AND THE ENGINEER OF RECORD.

A16. REFER TO SPECIFICATIONS FOR ADDITIONAL INFORMATION AND REQUIREMENTS.

A18. THE CONTRACTOR SHALL USE CAUTION AND BE SOLELY RESPONSIBLE FOR LOCATION OF ALL EXISTING BURIED UTILITIES OR SYSTEMS PRIOR TO COMMENCING ANY EXCAVATION. EMPLOY AN UNDERGROUND SERVICE LOCATOR FIRM TO ENSURE THAT EXISTING UNDERGROUND UTILITIES ARE ACCURATELY LOCATED AND THAT THEY WILL NOT BE DISTURBED. CONTRACTOR SHALL REPAIR ANY DAMAGE TO EXISTING UTILITIES OR SYSTEMS OCCURS AS A RESULT OF OPERATIONS PERFORMED UNDER THIS CONTRACT. REPAIRS TO EXISTING SHALL BE MADE USING MATERIALS AND METHODS TO MATCH EXISTING CONSTRUCTION AND SHALL BE APPROVED BY THE ENGINEER PRIOR TO RE-COVERING.

B. LIGHTING

B1. ALL LUMINAIRES SHALL BE PROPERLY SUPPORTED IN ACCORDANCE WITH THE CEILING SYSTEM MANUFACTURER RECOMMENDATIONS AND LOCAL CODE REQUIREMENTS.

C. CONDUITS

C1. GALVANIZED RIGID CONDUIT OR INTERMEDIATE METAL CONDUIT MAY BE USED FOR ALL APPLICATIONS. EXCEPT WHERE INDICATED OTHERWISE, GALVANIZED RIGID CONDUIT MUST ALWAYS BE USED IN THE FOLLOWING APPLICATIONS:
a. EAST IN FLOOR SLABS.
b. ANYWHERE WHERE IS EXPOSED CONDUIT, UP TO 8'-0" ABOVE FLOOR.
c. THE MINIMUM BEND RADIUS FOR ALL UNDERGROUND CONDUITS SHALL BE 8 TIMES THE INTERNAL CONDUIT DIAMETER.

C2. EMT MAY BE USED FOR THE FOLLOWING APPLICATIONS, UNLESS INDICATED OTHERWISE:
1. INDOORS IN CONCEALED AREAS (IN PARTITIONS, ABOVE CEILING).
2. EXPOSED IN STORAGE ROOMS AND IN MECHANICAL AND ELECTRICAL ROOMS.
3. ABOVE 8'-0" IN AREAS OF EXPOSED CONDUIT.

C3. EMT MAY NOT BE USED IN THE FOLLOWING APPLICATIONS:
1. OUT-OF-DOORS.
2. DAMP OR MOIST LOCATIONS.

C4. FLEXIBLE METAL CONDUIT SHALL BE USED FOR ALL CONNECTIONS TO EQUIPMENT (TRANSFORMERS, AIR CONDITIONING EQUIPMENT, PUMPS, KITCHEN EQUIPMENT, ETC.) AND LIGHTING FIXTURES.

C5. LIQUID-TIGHT TYPE FLEXIBLE METAL CONDUIT SHALL BE USED FOR ALL APPLICATIONS EXCEPT THAT NON-LIQUID-TIGHT MAY BE USED FOR THE FOLLOWING:
a. INDOOR LIGHT FIXTURES.
b. INDOOR TELE-POWER POLES.
c. OTHER SIMILAR INDOOR LIGHT-DUTY APPLICATIONS.

C6. EXTERIOR LIQUID-TIGHT FLEX SHALL BE ULTRAVIOLET RESISTANT.

C7. RACEWAYS SUPPORTS: OVERHEAD RACEWAYS SHALL BE SUPPORTED FROM THE STRUCTURE ABOVE.
a. RACEWAYS SHALL NOT BE SUPPORTED FROM CEILING SUSPENSION WIRES.
b. RACEWAYS SHALL NOT BE SUPPORTED FROM DUCTWORK OR PIPING.
c. RACEWAYS SHALL NOT BE SUSPENDED WITH WIRES ONLY. PROPER CONDUIT HANGERS ARE REQUIRED.
d. WHEN POSSIBLE, RACEWAYS SHALL BE GROUPED AND SUSPENDED ON "TRAPEZE" SUPPORTS.

C8. FITTINGS:
a. FITTINGS FOR RIGID AND IMC MAY BE THREADED TYPE, NO THREAD COMPRESSION, TYPE WHERE ALLOWED BY CODE.
b. FITTINGS FOR EMT MAY BE COMPRESSION TYPE WHERE ALLOWED BY CODE.

C9. RACEWAY SIZE SHALL BE 3/4" MINIMUM (EXCEPT FOR FLEX TO LIGHTING FIXTURES).

C10. ALL EMPTY CONDUITS TO BE PROVIDED WITH NYLON PULL STRINGS.

C11. EXPOSED CONDUITS SHALL NOT BE ALLOWED WITHIN THE OFFICE SPACES, CORRIDORS, LOBBIES, COMMON AREAS, ETC..

D. CONDUCTORS

D1. ALL CONDUCTORS SHALL BE THHN/THWN.

D2. ALL CONDUCTORS SHALL BE COPPER.

D3. ALL CONDUCTORS SHALL BE RUN IN CONDUIT (METALLIC TYPE).

D4. ALL BRANCH CIRCUITS TO HAVE A GREEN EQUIPMENT GROUNDING CONDUCTOR SIZED AS PER N.E.C. 250-22.

D5. ALL CABLES SHALL BE RUN WITHOUT SPLICES EXCEPT OTHERWISE INDICATED.

D6. CONTRACTOR SHALL INSTALL A PULL STRING IN ALL EMPTY CONDUITS AND INCLUDE TAGS IDENTIFYING SYSTEM.

D7. INSULATED CONDUCTORS SHALL BE COLOR CODED AS FOLLOWS:

120/208V SYSTEM

PHASE "A"	BLACK
PHASE "B"	RED
PHASE "C"	BLUE
NEUTRAL	WHITE
GROUND	GREEN

D8. UNLESS OTHERWISE NOTED, 120V, 20A BRANCH CIRCUIT CONDUCTORS SHALL BE SIZED PER TABLE BELOW:

DISTANCE	WIRE SIZE
0'-60'	#12 MIN THROUGHOUT CIRCUIT
61'-120'	#10 MIN THROUGHOUT CIRCUIT
121'-240'	#8 MIN THROUGHOUT CIRCUIT

E. WIRING DEVICES

E1. LIGHT SWITCHES SHALL BE SPECIFICATION GRADE, RATED 120/277V, 20A (TUNGSTEN AND FLUORESCENT) MINIMUM.

E2. STANDARD CONVENIENCE RECEPTACLES SHALL BE SPECIFICATION GRADE, BACK OR SIDE WIRED SCREW CONNECTION RATED 15 OR 20A MINIMUM AS REQUIRED BY CODE.

E3. RECEPTACLES LOCATED ON WOOD PANELING SHALL BE PURCHASED IN THE SAME COLOR TO MATCH SURROUNDING PANELING.

E4. COVERPLATES:
a. IN UNFINISHED AND SERVICE AREAS, COVERPLATES SHALL BE STAMPED GALVANIZED STEEL WITH ROUNDED CORNERS.
b. IN FINISHED TYPE AREAS, PLASTIC DEVICE COVERPLATES WITH 3 WAY REINFORCING RIBS MAY BE USED. COVERPLATES LOCATED ON PANELING WALLS SHALL BE PURCHASED IN COLOR MATCHING SURROUNDING PANELING.

F. GROUNDING

F1. ALL ELECTRICAL SYSTEMS AND EQUIPMENT SHALL BE GROUNDED AS REQUIRED BY ALL APPLICABLE CODES AND REGULATIONS.

F2. EMT TYPE CONDUIT SHALL NOT BE USED AS THE CIRCUIT GROUP PATH ON FEEDERS TO MOTORS OR TO PANELBOARDS.

F3. FLEXIBLE CONDUIT IS NOT TO BE USED FOR GROUNDING. PROVIDE PULLED GREEN GROUND WIRE.

F4. PROVIDE PULLED GREEN GROUND WIRE FOR ALL SINGLE PHASE CIRCUITS AND FOR ALL THREE-PHASE CIRCUITS. SIZE IN ACCORDANCE WITH N.E.C. 250-95 AND INCREASE CONDUIT SIZE ACCORDINGLY.

G. SURGE PROTECTION

G1. PROTECTORS SHALL BE PROVIDED FOR THE FOLLOWING APPLICATIONS:
a. ON MICROPROCESSOR CONTROLLED EQUIPMENT AND OTHER SENSITIVE ELECTRONIC EQUIPMENT AT THE POINT OF PLUG-IN OR CONNECTION TO THE POWER SOURCE.
b. ON LIGHTING PANELBOARDS.

G2. A SEPARATE FLUSH ENCLOSURE ARRANGEMENT SHOULD BE PROVIDED SO THAT INDICATOR LIGHTS ARE VISIBLE AND COVER IS ACCESSIBLE.

H. POWER DISTRIBUTION EQUIPMENT

H1. FOR DISTRIBUTION PANELS USE MOLDED CASE CIRCUIT BREAKERS TYPE.

H2. FOR BRANCH PANELBOARDS (SERVING LIGHTING, RECEPTACLES, APPLIANCES, ETC.) USE PANELBOARD CONSTRUCTION WITH BOLT-ON CIRCUIT BREAKERS. LOAD CENTER TYPE (PLUG IN) CONSTRUCTION FOR PANELBOARDS IS NOT ACCEPTABLE.

H3. DO NOT USE HALF-SIZE OR TANDEM CIRCUIT BREAKERS.

H4. FUSED AND NON-FUSED DISCONNECTS (SAFETY SWITCHES) SHALL BE HEAVY DUTY, RATED 240V (AT 120/208V)

H5. FUSES SHALL BE DUAL ELEMENT, TIME DELAY TYPE UNLESS OTHERWISE NOTED.

I. CIRCUITS AND EQUIPMENT IDENTIFICATION

I1. IDENTIFICATION NAMEPLATES SHALL BE ENGRAVED PLASTIC LAMINATE, 3 LAYER, WHITE LETTERS ON BLACK BACKGROUND, APPROXIMATELY 1"x3" AND ATTACHED WITH SCREWS (NOT RIVETS OR ADHESIVES). DO NOT USE TAPE TYPE LABELING.
a. EQUIPMENT IDENTIFICATION NAMEPLATES ARE REQUIRED FOR:
PANELBOARDS
TRANSFORMERS
RELAYS (INDIVIDUALLY MOUNTED)
CONTACTORS (INDIVIDUALLY MOUNTED)
DISCONNECTS
ENCLOSED CIRCUIT BREAKERS
PUSHBUTTONS
b. CIRCUIT IDENTIFICATION NAMEPLATES ARE REQUIRED FOR EACH CIRCUIT OF EACH OF THE FOLLOWING:

I2. EACH BRANCH PANEL (FEEDING LIGHTING, RECEPTACLES, ETC.) SHALL HAVE ITS DIRECTORY COMPLETELY FILLED IN. DIRECTORIES SHALL BE TYPED AND CIRCUIT DESCRIPTION MUST CLEARLY INDICATE THE LOCATION AND TYPE OF LOAD BEING SERVED.
a. DISTRIBUTION PANEL.
b. SWITCHBOARD.

J. FIRE ALARM SYSTEMS

J.1 THE FIRE ALARM SYSTEM SHALL INCLUDE WIRING, RACEWAYS, PULL BOXES, TERMINAL CABINETS, OUTLET AND MOUNTING BOXES, CONTROL EQUIPMENT, ALARM, AND SUPERVISORY SIGNAL INITIATING DEVICES, ALARM NOTIFICATION APPLIANCES, AND OTHER ACCESSORIES AND MISCELLANEOUS ITEMS REQUIRED FOR A COMPLETE OPERATING SYSTEM EVEN THOUGH EACH ITEM IS NOT SPECIFICALLY MENTIONED OR DESCRIBED. PROVIDE SYSTEM COMPLETE AND READY FOR OPERATION.

J.2 THE SYSTEM LAYOUT ON THE DRAWINGS SHOWS THE INTENT OF COVERAGE. FIRE ALARM CONTRACTOR SHALL CONSIDER IN HIS BID A MINIMUM MORE OF EACH INITIATION AND NOTIFICATION DEVICES TO SATISFY ANY REQUIREMENT OF THE AUTHORITY HAVING JURISDICTION (AHJ), AND THOSE DEVICES, IF NOT USED, WILL BE RETURNED TO THE OWNER FOR MAINTENANCE AND REPLACEMENT.

J.3 AHJ APPROVAL IS REQUIRED FOR SUBMITTALS. PROVIDE TWO COMPLETE SETS OF SUBMITTALS.

J.4 PROVIDE SHOP DRAWINGS ACCORDING TO NFPA 72. SHOW POINT-TO-POINT WIRING DIAGRAM SHOWING THE POINTS OF CONNECTION AND TERMINALS USED FOR ELECTRICAL FIELD CONNECTION IN THE SYSTEM.

J.5 PROVIDE A COMPLETE DESCRIPTION OF THE SYSTEM OPERATION IN MATRIX FORMAT ON THE DRAWINGS. INCLUDE ANNOTATED CATALOG DATA, IN TABLE FORMAT ON THE DRAWINGS, SHOWING MANUFACTURER'S NAME, MODEL, VOLTAGE, AND CATALOG NUMBERS FOR EQUIPMENT AND COMPONENTS.

J.6 PROVIDE COMPLETE RISER DIAGRAMS INDICATING THE WIRING SEQUENCE OF DEVICES AND THEIR CONNECTIONS TO THE CONTROL EQUIPMENT. INCLUDE A COLOR CODE SCHEDULE FOR THE WIRING. INCLUDE FLOOR PLANS SHOWING THE LOCATIONS OF DEVICES AND EQUIPMENT.

J.7 TEST REPORTS: FURNISH PRELIMINARY TEST RESULT TO THE AHJ. INCLUDE THE CONTROL PANEL AND INITIATING AND INDICATING DEVICES, A UNIQUE IDENTIFIER FOR EACH DEVICE WITH AN INDICATION OF TEST RESULTS.

J.8 BATTERY POWER CALCULATIONS:
- PROVIDE COMPLETE BATTERY CALCULATIONS FOR BOTH THE ALARM AND SUPERVISORY POWER REQUIREMENTS. AMPERE HOUR REQUIREMENTS FOR EACH SYSTEM COMPONENT SHALL BE SUBMITTED WITH THE CALCULATIONS.

J.9 PROVIDE SURGE PROTECTIVE DEVICES FOR FIRE ALARM CIRCUITS COMING INTO THE BUILDING.

K. COMMUNICATIONS

K1. PROVIDE TWO COMMUNICATIONS DROPS AT EACH DATA/PHONE OUTLET. DROPS SHALL BE UTP CABLE CAT 6 AND SHALL BE EXTENDED UP TO COMMUNICATION BACKBOARD.

K2. PROVIDE ON CATV DROP AT EACH TV OUTLET DROPS SHALL BE COAX RG-6 CABLE AND SHALL BE EXTENDED UP TO COMMUNICATION BACKBOARD.

NOTES:

1- WITHIN 30 DAY AFTER THE DATE OF SYSTEM ACCEPTANCE, RECORD DRAWINGS OF THE ACTUAL INSTALLATION SHALL BE PROVIDED TO THE BUILDING OWNER, INCLUDING A SINGLE-LINE DIAGRAM OF THE BUILDING ELECTRICAL DISTRIBUTION SYSTEM AND FLOOR PLANS INDICATING LOCATION AND AREA SERVED FOR ALL DISTRIBUTION. FBC EC 505.7.4.1

2- AN OPERATING MANUAL AND MAINTENANCE MANUAL SHALL BE PROVIDED TO THE BUILDING OWNER, INCLUDING SUBMITTAL DATA STATING EQUIPMENT RATING AND SELECTED OPTIONS FOR EACH PIECE OF EQUIPMENT REQUIRING MAINTENANCE, OPERATION AND MAINTENANCE MANUALS FOR EACH PIECE OF EQUIPMENT REQUIRING MAINTENANCE WITH CLEARLY IDENTIFIED REQUIRED ROUTINE MAINTENANCE ACTIONS, AND NAMES AND ADDRESSES OF AT LEAST ONE QUALIFIED SERVICE AGENCY. FBC EC 505. 7. 4. 2

ELECTRICAL SYMBOL LEGEND

LIGHTING FIXTURES

- LIGHT FIXTURE TYPE
- 1'x4' FLUORESCENT LUMINAIRE, CEILING/WALL
- 1'x4' FLUORESCENT LUMINAIRE, BATTERY/EMERGENCY, CEILING/WALL
- 2'x2' FLUORESCENT LUMINAIRE, BATTERY/EMERGENCY
- 2'x4' FLUORESCENT LUMINAIRE, BATTERY/EMERGENCY
- SURFACE MOUNTED LUMINAIRE, BATTERY/EMERGENCY
- EMERGENCY LIGHT LUMINAIRE SINGLE FACE EXIT LIGHT ARROW INDICATES DIRECTION OF EGRESS
- DOUBLE FACE EXIT LIGHT ARROW INDICATES DIRECTION OF EGRESS
- POLE MOUNTED SITE LIGHTING LUMINAIRE RECTANGLES INDICATE NUMBER OF FIXTURES
- POST TOP SITE LIGHTING LUMINAIRE
- PADDLE FAN

SWITCHES

- S — SWITCH
- S_3 — SWITCH, 3-WAY
- S_T — SWITCH – TIMER
- S_{OS} — SWITCH, OCCUPANCY SENSOR
- S_M — MOTORIZED SWITCH

LIGHTING CONTROL DEVICES

- PH — PHOTOCELL
- TC — TIMECLOCK (ASTRONOMICAL TIME SWITCH)
- LCP — LIGHT CONTROL PANEL

POWER DISTRIBUTION

- 120/208V PANELBOARD, SURFACE MOUNT
- 120/208V PANELBOARD, RECESSED
- 277/480V PANELBOARD, SURFACE MOUNT
- 277/480V PANELBOARD, RECESSED
- UNDERGROUND CONDUIT
- CONDUIT AND WIRE RUN CONCEALED IN CEILING OR WALL.
- FLEXIBLE CONDUIT
- 1811-1,3 — BRANCH CIRCUIT HOMERUN: LONG HASHMARK WITH FLAG DENOTES GROUND WIRE, LONG HASHMARK WITHOUT FLAG DENOTES NEUTRAL WIRE, SHORT HASHMARK DENOTES PHASE WIRE.
- R — UL 294 LISTED, 277V, EMERGENCY POWERED LIGHTING RELAY CONTROL DEVICE LOCATED ABOVE CEILING. LOCATED WITHIN 36" OF EMERGENCY POWERED LUMINAIRE.
- OS — DUAL TECHNOLOGY (PASSIVE INFRARED MICROPHONIC) CEILING MOUNTED OCCUPANCY SENSOR TYPE 1
  SUBSCRIPT: 1-COVERAGE PATTERN: UP TO 12 FEET IN CIRCULAR PATTERN WHEN MOUNTED AT 9 FEET A.F.F.
  2-COVERAGE PATTERN: UP TO 20 FEET IN A CIRCULAR PATTERN WHEN MOUNTED AT 9 FEET A.F.F.
- WIRELESS ROUTER INTERNET ACCESS, PROVISION ONLY (N.I.C.)

POWER DEVICES

- SINGLE WALL RECEPTACLE 18" U.O.N.
- DUPLEX WALL RECEPTACLE FLUSH MTD. 18" U.O.N.
- QUADRUPLEX WALL RECEPTACLE FLUSH MTD. 18" U.O.N.
- RECESSED DUPLEX WALL RECEPTACLE FLUSH MOUNTED HORIZONTALLY 5" ABOVE COUNTER TOP, IN BATHROOM 48" A.F.F. U.O.N.
- TV — DUPLEX RECEPTACLE FOR TV LOCATED AT 84" AFF UNLESS NOTED OTHERWISE LOCATE IN COMMON BOX WITH CCTV ADJACENT TO TV BRACKET
- GFI — DUPLEX RECEPTACLE FLUSH MOUNTED WITH GROUND FAULT CIRCUIT INTERRUPTER
- GFI — DUPLEX RECEPTACLE WITH GROUND FAULT INTERRUPTER 48" A.F.F. U.O.N.
- WP/GFI — DUPLEX RECEPTACLE, GROUND FAULT WITH CAST ALUMINUM WEATHERPROOF "IN USE" COVER
- 30A, 120V, RECEPTACLE TO MATCH WARMING CART REQUIREMENTS.
- DISCONNECT SWITCH, NUMBER OF POLES AND RATING AS INDICATED ON PLANS
- J — JUNCTION BOX
- PB — PULL BOX
- T — TRANSFORMER
- M — MOTOR
- GROUND BUS BAR
- 5/8"Ø X 30'L GROUND ROD WITH TEST INSPECTION WELL
- START/STOP PUSHBUTTON

FIRE ALARM DETECTION SYSTEM

- F — MANUAL FIRE ALARM PULL STATION
- F — FIRE ALARM COMBINATION SPEAKER/STROBE DEVICE (75 CANDELA MINIMUM, 110 CANDELA WHERE NOTED)
- S — FIRE ALARM STROBE-ONLY (NO SPEAKER)
- H — 135° HEAT DETECTOR
- S — SMOKE DETECTOR
- S/E — SMOKE DETECTOR CEILING MOUNTED WITH RELAY FOR ELEVATOR RECALL.
- S/D — DUCT SMOKE DETECTOR
- K — FIRE ALARM FIREMEN'S TELEPHONE JACK
- FS — FIRE ALARM SYSTEM CONNECTION TO FIRE SPRINKLER SYSTEM WATER FLOW SWITCH
- TS — FIRE ALARM SYSTEM CONNECTION TO FIRE SPRINKLER SYSTEM WATER TAMPER SWITCH
- RA — REMOTE ANNUNCIATOR PANEL

TELEVISION DISTRIBUTION SYSTEM

- TV — TELEVISION COAXIAL OUTLET
- TVTC — TELEVISION TERMINAL CABINET "TVTC"
- TVER — TELEVISION EQUIPMENT RACK

PREMISE DISTRIBUTION SYSTEMS

- WALL MOUNTED DATA OUTLET (3/4" E.C. TO NEAREST T.T.B. U.O.N.)
- WALL MOUNTED TELEPHONE OUTLET (3/4" E.C. TO NEAREST T.T.B. U.O.N.)
- WALL MOUNTED TELEPHONE/DATA OUTLET

MISCELLANEOUS SYMBOL LEGEND

- XX — DETAIL NUMBER
- TITLE — DETAIL TITLE REFERENCE
- XX.XX SCALE: — SHEET NUMBER WHERE DETAIL IS REFERENCED
- ADDITIONAL SHEET REFERENCES
- XX — DETAIL NUMBER
- XX.XX — SHEET NUMBER WHERE DETAIL IS REFERENCED

ABBREVIATIONS

A, AMP	AMPERES
AFF	ABOVE FINISHED FLOOR
AFG	ABOVE FINISHED GRADE
AIC	AMPERES INTERRUPTING
AWG	AMERICAN WIRE GAUGE
BFC	BELOW FINISHED CEILING
BFG	BELOW FINISHED GRADE
CONDL	CONDUIT
CAB	CABINET
CKT	CIRCUIT
CLG	CEILING
DISC	DISCONNECT(ING)
DWG	DRAWING(S)
EA	EACH
EF	EXHAUST FAN
EQUIP	EQUIPMENT
EWC	ELECTRIC WATER COOLER
EWH	ELECTRIC WATER HEATER
EXH	EXHAUST
EXIST	EXISTING
FA	FIRE ALARM
FLUOR	FLUORESCENT
GFCI	GROUND FAULT CIRCUIT INTERRUPTER
GFP	GROUND FAULT PROTECTION
GND	GROUND
HGT	HEIGHT
HID	HIGH INTENSITY DISCHARGE
INC	INCANDESCENT
JB	JUNCTION BOX
KV	KILO-VOLTS
KVA	KILO-VOLTS-AMPERES
KW	KILO-WATTS
LTG	LIGHTING
MAX	MAXIMUM
MCB	MAIN CIRCUIT BREAKER
MFR	MANUFACTURER
MIN	MINIMUM
MISC	MISCELLANEOUS
MTR	MOTOR
MTD	MOUNTED
MTG	MOUNTING
NEC	NATIONAL ELECTRICAL CODE
PNL	PANEL
PSI	PULL STATION INSIDE
PVC	POLYVINYL CHLORIDE
REC	RECEPTACLE
RGS	RIGID GALVANIZED STEEL
TEL	TELEPHONE
TYP	TYPICAL
UON	UNLESS OTHERWISE NOTED
V	VOLTS
VA	VOLT-AMPERES
VFD	VARIABLE FREQUENCY CONTROLLER
VP	VANDAL PROOF
W	WATTS
WP	WEATHER PROOF/WEATHER RESISTANT
XFMR	TRANSFORMER

NOTE: ALL SYMBOLS MAY NOT BE USED.

To the best of the Architect's or Engineer's knowledge, the plans and specifications comply with the applicable minimum codes and the applicable fire-safety standards as determined by the local authority in accordance with F.B.C. section 109 and Chapter 633, Florida Statues.

WOLFBERG ALVAREZ
ARCHITECTURE-ENGINEERING
3225 AVIATION AVE., SUITE 400
MIAMI, FLORIDA 33133
V 305.666.5474
F 305.666.4094
WOLFBERGALVAREZ.COM
AA 002416 EB 002354

CITY OF HIALEAH — INCORPORATED 1925

HIALEAH MULTIPURPOSE ADULT CENTER
1380 WEST 26 PLACE
HIALEAH, FLORIDA, 33010

SEAL

MANUEL A. MOLLEDEDO, P.E.
ELECTRICAL ENGINEER
FLA. REG. NO. 45099

WA PROJECT NO.: 21214.00

ISSUE DATE
01/30/13

NO.	REVISION DATE
1	03/20/13

DRAWING TITLE
SYMBOL LEGEND & NOTES

SHEET NUMBER
E1.00

P:\Hialeah Multipurpose Adult Center.2012\Drawings\CD\Electrical\E1.00-HVAC.dwg Mar 20, 2013 - 3:15pm MTOLEDO

FAULT CURRENT CALCULATIONS POINT TO POINT METHOD FOR 3-PHASE SERVICE		A
Utility Transformer Capacity (Kva)	Kva	750
Utility Transformer in per-cent (%Z)	%Z	5.4
Volts Line to Line (On Secondary of Utility Transformer) (Volts)	V_{L-L} =	208
Nominal Secondary Current (Calculated) (Amps)	I_{sec} =	2082
Distance from Xfrm to calculated point (in feet)	L =	150
Number of sets	# sets	1
Conductor size	KCM	300
Conduit metal or non-magnetic	Metallic?	NO
Value equals to one over the impedance per foot of values found in IEEE 241-1990 tables for conductors & bussway	"C" =	20,868
Sum of the full load current of all contributing motors	MC	70

ITEM	CALCULATION	
Nominal Current @ Xmer Secondary	2,082	Amps
Transformer multiplier = 100/(%Z)	19	
(*) Fault current at Xfmr location:	38,556	Amps
Factor "f" for 3-phase	2.3078	
Multiplier "MF"	0.3023	
Symmetrical RMS fault at location	11,656	Amps
Motor contribution	19	Amps
Total fault current at Point "A" location	11,675	Amps

LOAD SUMMARY SHEET

BLDG. 0 — PRINT DATE 03/20/13
PROJ HIALEAH MULTIPURPOPSE BLDG — MADE BY: M M
PANEL "P" (SERVICE RATED) — CHECKED BY A G

TYPE	LOAD TYPE	BREAKER SIZING (%)	DEMAND FACTOR (%)	CONNECTED LOAD (VA)	DEMAND LOAD (VA)
L	LIGHTING	125%	125%	3610	4513
R	GENERAL RECEPTACLE (*)	125%	50%	6480	6480
RS	SPECIAL RECEPTACLE/EQUIP	125%	85%	32042	27236
				0	0
A	AIR CONDITIONING & VENT	125%	100%	39900	39900
C	CYCLIC MECHANICAL LOADS	125%	100%	1000	1000
				0	0
				0	0
				0	0
				0	0
				0	0
				0	0
				0	0
				0	0
				0	0
				0	0
				0	0
			TOTALS (VA)	83032	79128
		OVERALL DEMAND FACTOR =	95%		
		DEMAND AMPS =	220		
			275	125% SIZING FACTOR	
			275	100% SPARE	

* GENERAL RECEPTACLE DEMAND= FIRST 10 KVA. @ 100%, REMAINDER @ 50%

LIGHTING POWER DENSITY= $\frac{3610\ W}{4653\ SF}$ = 0.77 W/SF

PANELBOARD NAME: "P" (SERVICE RATED) — 22,000 RMS SYMMETRICAL A.I.C.
PANELBOARD TYPE: MAIN CIRCUIT BREAKER — SURFACE MOUNTED, NEMA 1 ENCLOSURE — 300 AMP TRIP MAIN BREAKER
PANEL LOCATION: MECHANICAL ROOM — 208Y/120 VOLTS, 3 PHASE, 4 WIRE, 60 Hz — 400 AMP MAINS
SUPPLIED FROM: SERVICE — INTERG.SURGE SUP.DEVICE

CKT NO.	TRIP AMPS	NO. POLES	WIRE / GND / COND	LOAD SERVED	LOAD VA	Ø	LOAD VA	LOAD SERVED	WIRE / GND / COND	NO. POLES	TRIP AMPS	CKT NO.
1	20	1	2#12 , #12 GND, 1/2" C	LTS TERRACE [109]	450	A	6100	AC - AHU [102]	3#4 , #8 GND, 1" C	3	70	2
3	20	1	2#12 , #12 GND, 1/2" C	LTS MULTI PURP ROOM [108]	1300	B	6100					
5	20	1	2#12 , #12 GND, 1/2" C	LTS RESTROOMS [104]	1430	C	6100					
7	20	1	2#12 , #12 GND, 1/2" C	LTS OUTDOOR [100] (1)	430	A	7200	AC - CU [111]	3#3 , #8 GND, 1" C	3	80	8
9	20	1	2#12 , #12 GND, 1/2" C	REC OFFICE [101]	1080	B	7200					
11	20	1	2#12 , #12 GND, 1/2" C	REC MECHANICAL ROOM [102]	540	C	7200					
13	20	1	2#12 , #12 GND, 1/2" C	REC MULT PURP ROOM [108]	1440	A	540	OUTDOOR REC [111]	2#12 , #12 GND, 1/2" C	1	20	14
15	20	1	2#12 , #12 GND, 1/2" C	REC TERRACE [109]	900	B	500	REC TELECOM BACKBOARD [102]	2#12 , #12 GND, 1/2" C	1	20	16
17	20	1	2#12 , #12 GND, 1/2" C	FUTURE W-F- ROUTER [108]	500	C	500	REC TELECOM BACKBOARD [102]	2#12 , #12 GND, 1/2" C	1	20	18
19	40	3	3#8 , #10 GND, 3/4" C	HOT TABLE [106] (4)	3430	A	900	DRINKING FOUNTAIN [107]	2#12 , #12 GND, 1/2" C	1	20	20
					3430	B	1080	REC RESTROOMS [105]	2#12 , #12 GND, 1/2" C	1	20	22
					3430	C	720	REFRIGERATOR [106] (3)	2#12 , #12 GND, 1/2" C	1	20	24
25	40	3	3#8 , #10 GND, 1" C	ELECT.DUCT HEATER [102] (2)	3333	A	1320	ICE MAKER [105] (3)	2#12 , #12 GND, 1/2" C	1	20	26
					3333	B	540	OVER COUNTER REC [106] (3)	2#12 , #12 GND, 1/2" C	1	20	28
					3333	C	1200	MICROWAVE [106] (3)	2#12 , #12 GND, 1/2" C	1	20	30
31	20	1	2#12 , #12 GND, 1/2" C	VAB - MOTORIZED DAMPER [102]	1000	A	360	OVER COUNTER REC [106] (3)	2#12 , #12 GND, 1/2" C	1	20	32
33	60	2	2#6 , #10 GND, 1" C	WATER HEATER [110]	4500	B	560	DISH WASHER [106] (3)	2#12 , #12 GND, 1/2" C	1	20	34
					4500	C	840	GARBAGE DISPOSAL [106] (3)	2#12 , #12 GND, 1/2" C	1	20	36
37	20	1	2#12 , #12 GND, 1/2" C	HAND DRYER [105]	1200	A	1176	COILING DOOR (1/2HP) [106]	2#12 , #12 GND, 1/2" C	1	20	38
39	20	1	2#12 , #12 GND, 1/2" C	HAND DRYER [104]	1200	B	296	CEILING FANS	2#12 , #12 GND, 1/2" C	1	20	40
41	20	1	2#10 , #10 GND, 3/4" C	COLD TABLE [106] (4)	840	C		SPARE		1	20	42
43	20	1	2#12 , #12 GND, 1/2" C	TV SET RECEPTACLE	600	A		SPARE		1	20	44
45	20	1		SPARE		B		SPARE		1	20	46
47	20	1		SPARE		C				1		48
49	20	1		SPARE		A				1		50
51	20	1		SPARE		B				1		52
53	20	1		SPARE		C				1		54

TOTAL CONNECTED LOAD = 83 kVA X 95% DEMAND FACTOR = 79.1 kVA ESTIMATED DEMAND LOAD
PHASE BALANCE (KVA) - A: 29.5 , B: 32.4 C: 31.1 DESIGN LOAD = 220 AMPERES, TOTAL LOAD WITH EXPANSION = 275 AMPERES

NOTES:
(1): CONTROLLED BY PHOTOCELL
(2): NON CONCURRENT LOAD
(3): ALL RECEPT. IN KITCHEN AREA SHALL BE GFCI TYPE
(4): PROVIDE GFCI BREAKER

VOLTAGE DROP CALCULATION

- FEEDERS

VOLTAGE	MAX CURRENT	No. OF SETS	WIRE SIZE	RESIST. OHM/1KFT	DISTANCE (FT)	TOTAL OHMS	VOLTAGE DROP	VD%
208	215	1	300KCM	0.0429	180	0.012	2.56	1.2%

- BRANCH CIRCUITS

CKT No.	VOLTAGE	MAX CURRENT	WIRE SIZE	RESIST. OHM/1KFT	DISTANCE (FT)	TOTAL OHMS	VOLTAGE DROP	VD%
1	120	3.75	12	1.98	100	0.396	1.49	1.2%
5	120	11.9	12	1.98	40	0.158	1.88	1.6%
19	208	28	8	0.778	50	0.067	1.89	0.9%
8	208	59	3	0.245	25	0.011	0.63	0.3%

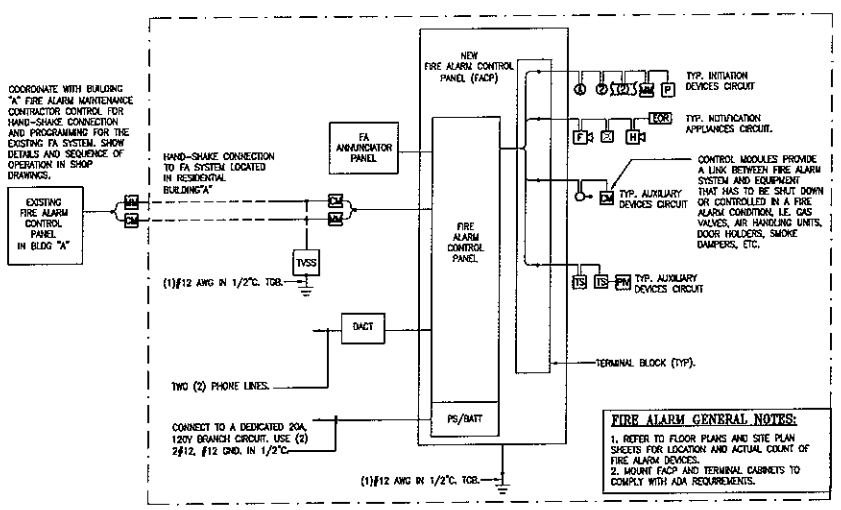

1 / E5.01 FIRE ALARM RISER DIAGRAM (TYPICAL)
N.T.S.

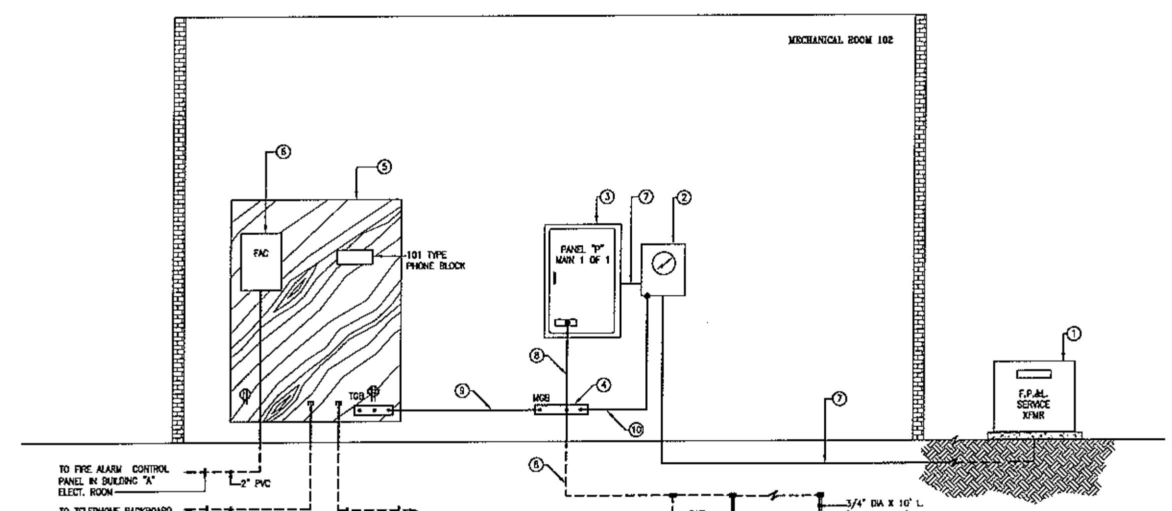

2 / E5.01 POWER AND SYSTEM RISER DIAGRAM
N.T.S.

NEW FIRE ALARM SYSTEM NOTES

1. FIRE ALARM SYSTEM CONDUITS SHALL BE DEDICATED TO FA SYSTEM WIRING, NO OTHER WIRING SHALL BE ALLOWED WITHIN THESE CONDUITS.
2. ALL SHUTDOWN FUNCTIONS FOR HVAC, GAS, FANS, ETC. SHALL ACTIVATE UPON GENERAL FIRE ALARM. PROVIDE ALL REQUIRED WIRING, EQUIPMENT AND CONNECTIONS TO IMPLEMENT THE SEQUENCE OF OPERATION.
3. USE WEATHERPROOF TYPE DEVICES FOR ALL OUTDOOR APPLICATIONS. ALL CONDUIT EXPOSED TO OUTSIDE OR UNDERGROUND AREAS SHALL BE PROVIDED WITH SEALING FITTING INTENDED TO PREVENT MOISTURE OR WATER FROM ENTERING THE FIRE ALARM CONDUIT SYSTEM.
4. USE CAST METAL BOXES FOR ALL EXPOSED OUTDOOR DEVICE INSTALLATIONS.
5. ALL STROBES LOCATED WITHIN THE SAME VIEWING AREA SHALL UTILIZE SYNCHRONIZED FLASHING PER NFPA-72.
6. PROVIDE ALL CONTROL MODULES WITH RELAY FUNCTIONS FOR SHUT-OFF ASSOCIATED WITH EQUIPMENT DESCRIBED IN THE SEQUENCE OF OPERATION.
7. CONTRACTOR SHALL SUBMIT FIRE ALARM SHOP DRAWINGS SIGNED AND SEALED BY A LICENSED PROFESSIONAL ENGINEER. SHOP DRAWINGS SHALL COMPLY WITH NFPA 72 4.5.1.1, AND FIRE DEPARTMENT REQUIREMENT.
8. FIRE ALARM CONTRACTOR SHALL PROVIDE A COPY OF FIRE ALARM SYSTEM SOFTWARE ON COMPACT DISK FORMAT AT END OF PROJECT INCLUDING USER ID AND PASSWORDS.
9. CONTRACTOR SHALL PROVIDE IMPRINT VIA PERMANENT TAG AT BASE OF EACH DEVICE (NOT ON DEVICE); INDICATING DEVICE NUMBER FOR SMOKE AND HEAT DETECTORS, PULL STATIONS, REMOTE MODULES AND TRANSPONDERS (PUT ADDRESS DEVICE NUMBER ON BOX).
10. CONTRACTOR SHALL PROVIDE CONDUIT AND WIRING FOR PHONE LINE CONNECTION; COORDINATE FINAL PHONE LINE CONNECTION WITH TELECOM PROVIDER.
11. ALL NOTIFICATION VISUAL DEVICES SHALL BE UL LISTED AND ADA COMPLIANT.
12. THE CONTRACTOR SHALL INCLUDE IN HIS BID A 10% MORE DEVICES TO SATISFY ANY REQUIREMENT FROM AHJ. THOSE DEVICES, IF NOT USED, WILL BE RETURNED TO THE OWNER FOR MAINTENANCE PURPOSE.

NEW FIRE ALARM SYSTEM SEQUENCE OF OPERATION

1. MANUAL ACTIVATION OF ANY PULL STATION OR AUTOMATIC ACTIVATION OF ANY AREA SMOKE DETECTOR, OR WATER FLOW SWITCH (INITIATION DEVICES) SHALL CAUSE AN ALARM TO BE TRANSMITTED INSTANTANEOUSLY TO ACCOMPLISH THE FOLLOWING:
   a. DISPLAY ALARM AT THE CONTROL PANEL IN THE FACILITY.
   b. TRANSMIT AN ALARM SIGNAL TO SUPERVISORY STATION.
   c. SOUND HORNS COMPLYING WITH APPLICABLE CODES THROUGHOUT THE FACILITY.
   d. ENERGIZE VISUAL ALARMS SHALL BE NON-SILENCEABLE.
   e. SHUT DOWN VENTILATION AND AIR HANDLING UNITS ACCORDING TO SREF.
   f. COMMUNICATE THE EVENT THROUGH A HAND-SHAKE CONNECTION TO THE FIRE ALARM SYSTEM IN RESIDENTIAL BUILDING "A".
2. ACTIVATION OF ANY SMOKE DUCT DETECTOR SHALL CAUSE THE FOLLOWING EVENT:
   a. DISPLAY A SUPERVISORY SIGNAL AT THE FIRE ALARM CONTROL PANEL.
   b. TRANSMIT A SUPERVISORY SIGNAL TO SUPERVISORY STATION.
   c. SHUT-DOWN VENTILATOR AND AIR HANDLING UNITS RELATED TO THE DUCT DETECTOR.
   d. COMMUNICATE THE EVENT THROUGH A HAND-SHAKE CONNECTION TO THE FIRE ALARM SYSTEM LOCATED IN BUILDING "A"
3. ACTIVATION OF ANY TAMPER SWITCH SHALL CAUSE THE FOLLOWING EVENT:
   a. DISPLAY A SUPERVISORY SIGNAL AT THE FIRE ALARM CONTROL PANEL.
   b. TRANSMIT A SUPERVISORY SIGNAL TO SUPERVISORY STATION.
   c. COMMUNICATE THE EVENT THROUGH A HAND-SHAKE CONNECTION TO THE FIRE ALARM SYSTEM LOCATED IN BUILDING "A"

ELECTRICAL RISER DIAGRAM NOTES:

(1) EXISTING FP&L TRANSFORMER: 750 KVA, 208Y/120V, ON SECONDARY. IMPEDANCE = 5.46%
(2) 320A., 208V., 3Ø, METER CAN. COORDINATE WITH FP&L. FOR TYPE AND MODEL.
(3) PANEL "P", MAIN 1 OF 1. MAIN BREAKER PANEL. REFER TO PANEL SCHEDULE ON THIS SHEET FOR DESCRIPTION.
(4) MAIN GROUND BAR. REFER TO DETAIL ON DWG. E6.01
(5) TELECOMMUNICATION BACKBOARD, 4'X 8'X 5/8" PLYWOOD PAINTED WITH TWO COAT OF FIREPROOFING PAINT.
(6) FIRE ALARM CONTROL PANEL BASIS OF DESIGN: BOSCH FPD-7024.
(7) SERVICE ENTRANCE CONDUCTORS: (4) #300 KCM THWN IN 4" PVC. AT 30" MIN. BELOW FINISHED GRADE. TOTAL AMPACITY = 285 AMPS.
(8) GROUNDING ELECTRODE CONDUCTOR: (1) #2 AWG THWN IN 3/4" PVC.
(9) BONDING CONDUCTOR: (1) #4 AWG THWN.
(10) BONDING CONDUCTOR: (1) #6 AWG THWN.

WOLFBERG ALVAREZ
ARCHITECTURE-ENGINEERING
3225 AVIATION AVE., SUITE 400
MIAMI, FLORIDA 33133
V 305.666.5474
F 305.666.4994
WOLFBERGALVAREZ.COM
AA 002418 EB 002354

HIALEAH MULTIPURPOSE ADULT CENTER
1380 WEST 26 PLACE
HIALEAH, FLORIDA, 33010

SEAL

WA PROJECT NO.: 21214.00
ISSUE DATE 01/30/13

NO.	REVISION DATE
1	03/20/13

DRAWING TITLE: RISER DIAGRAMS
SHEET NUMBER: E5.01

To the best of the Architect's or Engineer's knowledge, the plans and specifications comply with the applicable minimum codes and the applicable fire-safety standards as determined by the local authority in accordance with F.B.C. section 109 and Chapter 633, Florida Statutes.