SBS MODIFIED BITUMEN MINERAL SURFACED ROOFING SPECIFICATIONS

PART 1 - GENERAL

1.01 SUMMARY:
A. Styrene Butadiene Styrene (SBS) modified bitumen mineral surfaced roofing system including necessary accessories.

1.02 REFERENCES
A. American Society for Testing and Materials (ASTM):

1. D312-95a Specification for Asphalt Used in Roofing.
2. D2824-94 Specification for Aluminum-Pigmented Asphalt Roof Coatings, Non-Fibered, Asbestos Fibered, and Fibered Without Asbestos.
3. E84-96a Test Method for Surface Burning Characteristics of Building Materials.
4. E119-95a Test Methods for Fire Tests of Building Construction and Materials.
5. E136-96a Test Method for Behavior of Materials in a Vertical Tube Furnace at 750 _C.

B. Canadian General Standards Board (CGSB) 37-GP-56M.
C. National Roofing Contractors Association, latest edition.
D. Sheet Metal and Air-conditioning Contractor's National Association, Inc. (SMACNA): Architectural Sheet Metal Manual, latest edition.

1.03 SYSTEM DESCRIPTION
A. Performance Requirements: Coordinate application of roofing system with application of cants and bases, protruding materials, roof flashings, and roof accessories to assure the complete installation is watertight and according to warranty requirements.

1.04 SUBMITTALS
A. Product Data:
1. Submit specifications, installation instructions, and general recommendations from manufacturers of roofing system materials, for types of roofing required.
2. Include data proving materials comply with requirements.
B. Shop Drawings:
1. Show roof configuration and sheet layout, details at perimeter, and special conditions.
2. Indicate layout of tapered insulation materials.
C. Samples: Manufacturer's standard sizes of roofing plies.
D. Quality Control Submittals: Submit copies of Pre-Roofing Conference records and minutes of meetings.

1.05 QUALITY ASSURANCE
A. Installer Qualifications:
1. Firm with minimum 5 years successful experience in installation of roofing systems similar to those required for Project and acceptable to or licensed by manufacturer of primary roofing materials.
2. Assign work closely associated with flexible sheet roofing, including vapor barriers, insulation, flashing and counterflashing, expansion joints, and joint sealers, to installer of flexible sheet roofing.
B. Special Requirements:
1. Insurance Certification: Assist the Client in preparation and submittal of roof installation acceptance certification necessary for fire and extended coverage insurance on roofing and associated Work.
2. Thermal Resistance: Thermal resistance properties of insulating materials shall be designated by R-values, representing rate of heat flow through material of thickness indicated, measured by test method in referenced material standard or indicated, and expressed by temperature difference in degrees F. between 2 exposed faces required to cause 1 BTU to flow through 1 square foot per hour at mean temperatures indicated.
3. Fire Performance Characteristics:
a. Provide insulation materials with identical fire performance characteristics, as listed for each material or assembly, determined by testing according to methods indicated, UL, or other testing and inspecting agency acceptable to authorities having jurisdiction.
b. Surface Burning Characteristics: ASTM E84.
c. Fire Resistance Ratings: ASTM E119.
d. Combustibility Characteristics: ASTM E136.
C. Reference Specifications and Codes:
1. Codes and regulations of jurisdictional authorities.
2. Florida Building Code - Roof Covering and Application.
3. Underwriters Laboratories UL-790 and ASTM E-108 requirements for Class "A" fire rating for roof coverings.
4. Uplift requirements based on the basic wind velocity pressures for the project according to the most stringent applicable requirements among the following:
a. American Society of Civil Engineers (ASCE)
I. Use American Society of Civil Engineers (ASCE) Exposure Category "C" for wind design ".
5. Factory Mutual requirements for Class I rated assembly and FM 1-__C__uplift classifications as determined by American Society of Civil Engineers (ASCE) 7-93.
6. Roofing manufacturer's specifications.
D. Pre-Roofing Conference:
1. Before installation of roofing and associated work, meet at project site with installer, roofing manufacturer, installers of related Work, and other persons concerned with roofing performance, including where applicable, test agencies, governing authorities, A/E, and the Client's representative.
2. Provide minimum 72 hours advance notice to participants before convening pre-roofing conference.

1.06 WARRANTY
A. Contractor shall furnish the Client a 2 year written warranty, beginning at Substantial Completion, signed by Roofing applicator, covering materials and quality of work for entire "Roofing System", including repair and replacement of flashing and other roofing components deemed faulty or in disrepair by A/E during warranty period. This warranty shall include all other work performed by the contractor described in other sections, including but not limited to, caulking and sealants, sheet metal, insulation, and roofing accessories.
1. Such items deemed faulty or in disrepair shall be repaired at no cost to the Client.
2. Definition of faulty components or roofing in disrepair includes but is not limited to;
a. Blisters in roofing.
b. Cracks or ridging in roofing membranes.
c. Delamination, shears or tears in membrane.
d. Defects in the quality of work or materials.
e. Leaks of any kind.
B. Manufacturer shall furnish the Client a 5 year written warranty, beginning at Substantial Completion, signed by manufacturer's authorized representative for repair and replacement Period and Terms:
1. No dollar limit on warranty.
2. Single source responsibility.
3. Definition of faulty components or roofing in disrepair includes but is not limited to:
a. Blisters in roofing.
b. Cracks or ridging in roofing membranes.
c. Delamination, shears or tears in membrane.
d. Defects in the quality of work or materials.
e. Leaks of any kind.
C. Warranty shall be for roofing membrane over insulation deck.
D. General Requirements:
1. Contractor Responsibility:
a. Certified by manufacturer of roofing materials.
b. Obtain authorization from roofing materials manufacturer for Project before installation starts to insure issuance guarantee from manufacturer.
2. Manufacturer's Responsibility:
a. Pay all authorized costs of repair of roofing membrane necessary to stop leaks.
b. Provide guarantee for specified number of years.
c. Issue guarantee within 6 months after completion of roofing system.

PART 2 - PRODUCTS
2.01 MANUFACTURERS
A. SBS Modified Bitumen Mineral Surfaced Roofing with Granular Mineral Cap Sheets:
1. Bitec, Inc.
2. Firestone.
3. GAF Building Materials Corporation.
4. Garland Company, Inc.
5. Koppers Industries, Inc.
6. Manville Sales Corporation.
7. MB Technology.
8. Nord Bitumi U.S. Inc.
9. Siplast, Inc.
10. Soprema Roofing.
11. Tamko Roofing Products.
12. Tremco.
13. U.S. Intec.

2.02 MATERIALS
A. Base Sheet: Compatible reinforced base sheet manufactured and supplied by the roofing membrane manufacturer, type depending on substrate, and shall be part of the manufacturer's FM system for wind uplift as specified.
1. At concrete roof decks with a mopped down system, provide a concrete primer and a vented base ply or insulation complying with manufacturer's rated FM wind uplift classification as specified.
B. Roofing Membranes: (4 Ply)
1. One granular mineral, polyester reinforced, SBS over one smooth SBS, Modified bitumen sheets according to CGSB 37-GP-56M. UL Class A requirements, and FM wind uplift classification as specified.
C. Bitumen; Primer according to roofing membrane manufacturer's recommendations. Asphalt: Steep, according to ASTM D312. Type III for slopes to 3 inches; Type IV for slopes over 3 Inches.
D. Cant Strips: Wood fibered, fiberglass, rockwool, or pressure-treated pine, minimum 2 inch stock mitered to form a 45-degree angle at walls and parapets, nailed to solid deck. Perlite cants are not allowed.
E. Roofing tapes, sealers, nails, primers, and roof vents according to manufacturer's recommendations.
F. SBS Flashing Cement: Roofing cement according to ASTM D4586.
G. Insulation:
1. Tapered or flat polyisocyanurate foam board.
H. Recover/Overlayment Boards:
1. Dens-Deck by Georgia Pacific.
I. Fastenings: Comply with Factory Mutual uplift classification as specified.
1. Nails for Securing Felts to Wood Decks and Nailers: Hot dip galvanized ring shank roofing nails.
2. Nails for Securing Felts to Insulating Concrete: "Zonolite" nails with base ply fastener roofing disks.
1. 3. Nails for Securing Felts and Base Flashing to Masonry and Concrete: Flat head galvanized masonry nails.
4. Nails Securing Insulation to Concrete Deck: No.12 or No.14 diameter concrete fasteners or anchors.
5. Nails Securing Insulation to Wood Deck: No.10 or No.12 hex washer or No.3 Phillips fasteners.
6. Nails Securing Insulation to Gypsum Decks: Fasteners shall be designed with a shank that lodges in the deck and a large disc or plat under the fastener head to distribute the wind force transferred from the insulation.
7. Staple fasteners are not allowed.

PART 3 - EXECUTION
3.01 PREPARATION
A. Do not start application of roofing materials until deck surfaces are smooth, plane, firm, dry, free from dirt and foreign materials, and have been inspected and accepted, in writing by the Roofing Applicator and the A/E.
B. Verify pressure treated wood nailers and roof cants are in place and properly secured.
C. Properly prepare and secure vents, conduits, pipes, equipment bases, and other projections through the roof deck. Clean exposed metal surfaces of paint, rust, scale, or other foreign matter. Drive protecting nails and screws flush, recess anchor bolts and nuts flush, and cutoff projecting bolt ends flush.
D. Thoroughly clean deck surface before application of roofing materials, using compressed air, vacuum, or other approved method.
E. Starting of the work will be considered acceptance of base surfaces by the Roofing Applicator and assurance by the Roofing Applicator of a watertight job and ability to provide the required warranty.
F. Protect building and adjacent surfaces from damage because of bitumen spillage, repair or replace such surfaces so damaged. Do not store materials on completed roofing.
G. Over exposed bitumen, provide mineral granules matching granular cap sheets.
H. Water stops:
1. Protect roof deck and partially completed roofing from moisture by providing water stops at end of each day's work or when weather is threatening.
2. Failure to protect deck, roof insulation, and roofing will result in removal of damaged materials or materials containing excessive moisture.
3. Remove water stops before start of new work.

Phasing is not allowed. Mineral cap sheet shall follow the smooth sheet within 72 hours.

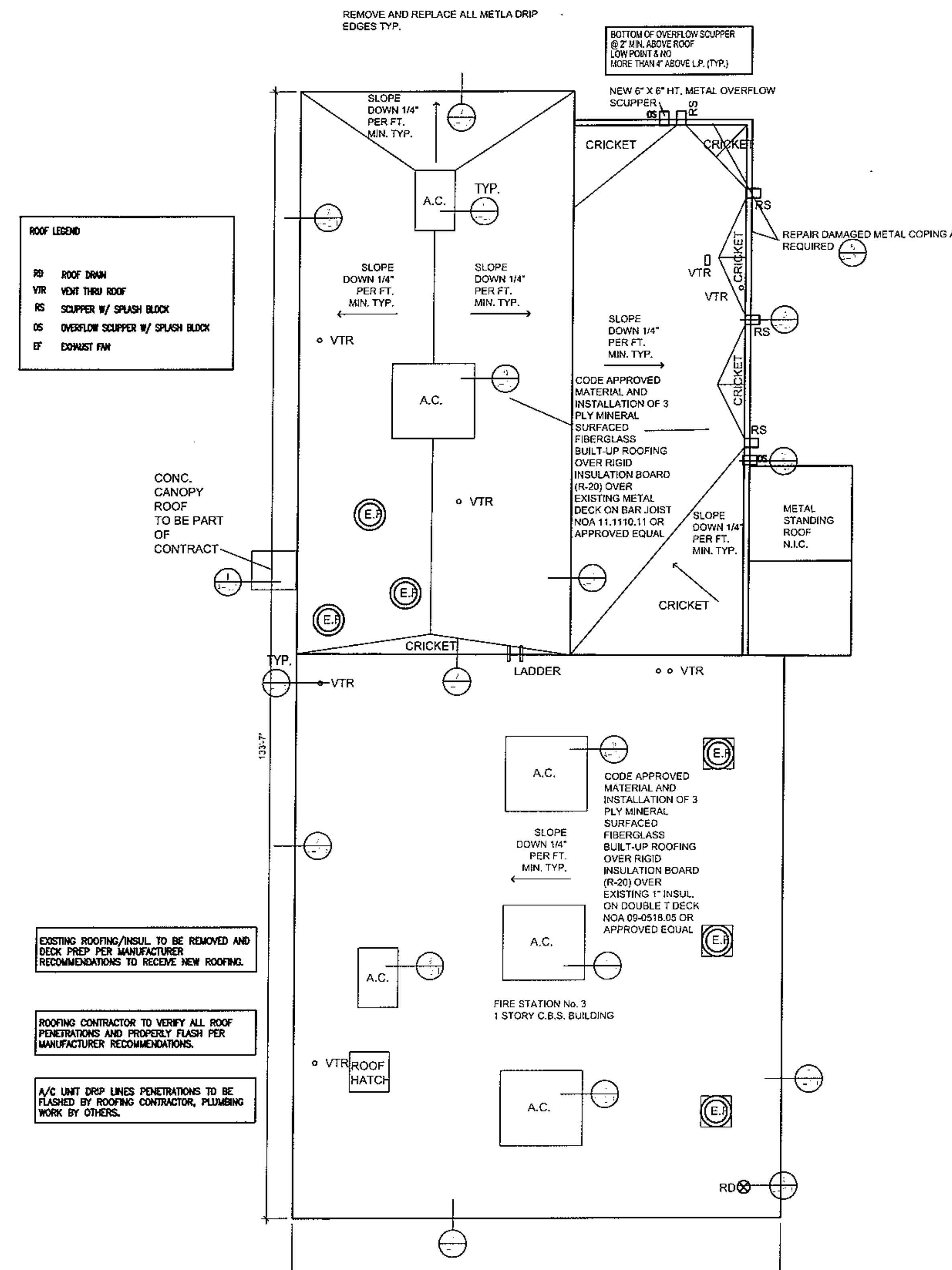

ROOF PLAN
SCALE: 1/8" = 1'-0"

City of Hialeah
Construction and Maintenance
900 East 56th Street Bldg. 1
HIALEAH, FLORIDA 33013
tel: (305) 687-2682
fax: (305) 687-2642

City Architect
REINALDO A GOMEZ
LIC. AR0013736

PROJECT No.
1304

FIRE STATION
No. 3
RE-ROOFING

800 WEST 49 th. AVE
HIALEAH, FL

CONSULTANTS

SEAL

No.	DATE	REVISION

DATE: 01-31-13

SCALE: AS SHOWN

DRAWN BY: ENTERRRAHUEVO

CHECKED BY: R.G.

This drawing is property of the City of Hialeah and is not to be reproduced or copied in whole or part. It is not to be used on any other project and is to be returned upon request.

SHEET TITLE
ROOF FLOOR PLAN

SHEET NUMBER
AA-1.1

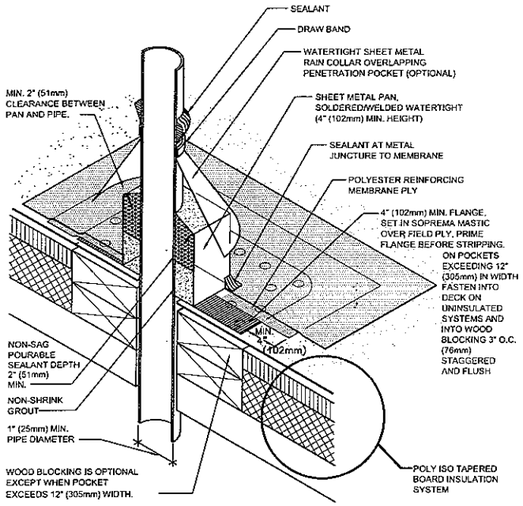

VENT THRU ROOF
NTS

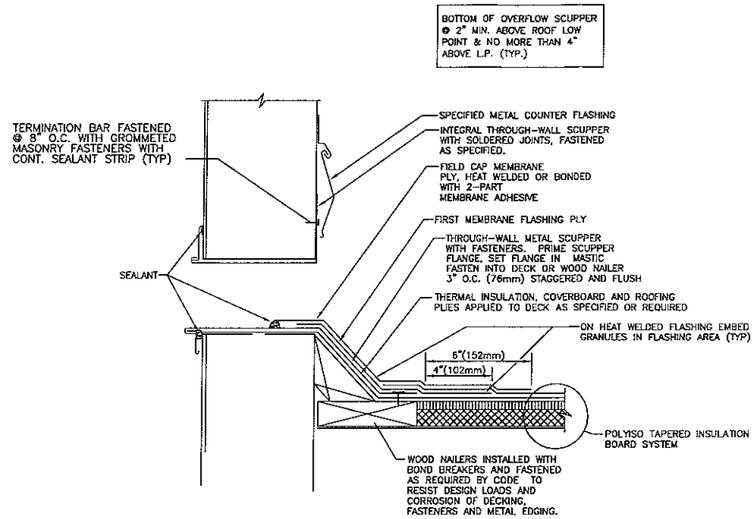

OVERFLOW SCUPPER DETAIL
NTS

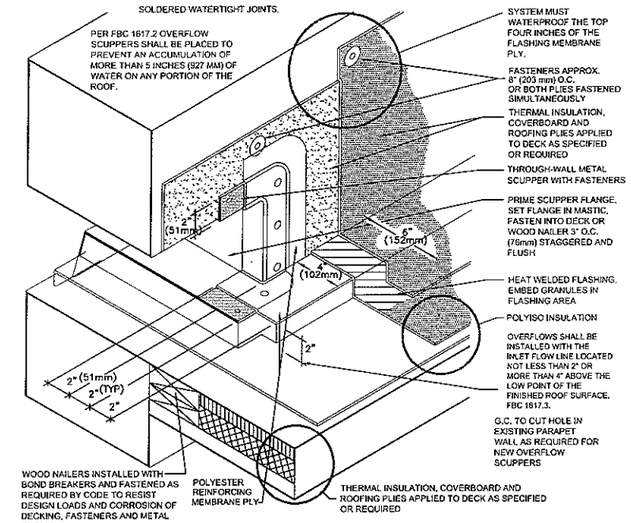

SCUPPER DETAIL
NTS

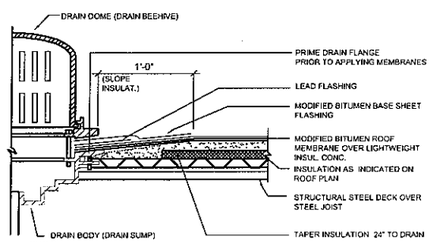

NOTES:

MIN. 30" IN. SQUARE 4LB LEAD FLASHING SET ON THE FINISHED ROOFING FELTS IN MASTIC, PRIME TOP SURFACE BEFORE STRIPPING. MEMBRANE PLIES, METAL FLASHING, AND FLASH-IN PLIES EXTEND UNDER CLAMPING RING. STRIPPING MEMBRANE EXTENDS 4" BEYOND EDGE OF FLASHING SHEET.

ROOF DRAIN
NTS

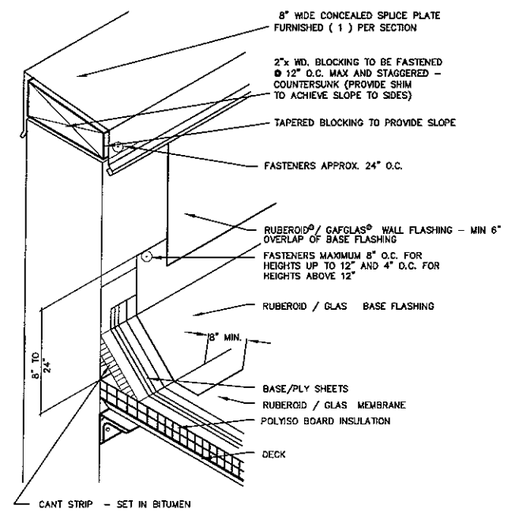

INTERMEDIATE PARAPET WALLS DETAILS
NTS

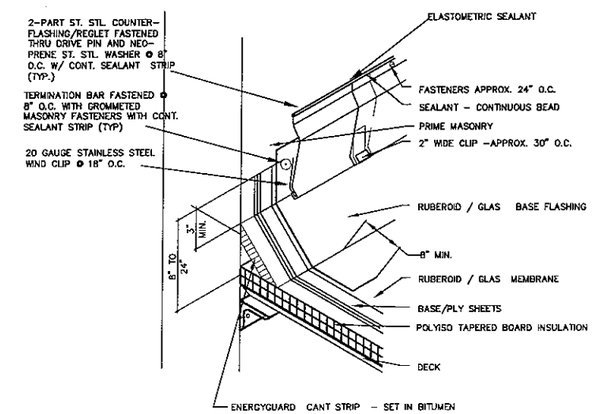

WALL FLASHING DETAIL
NTS

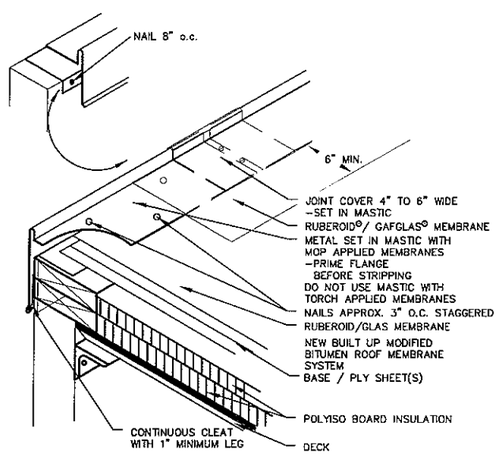

FLAT EDGE DETAIL
NTS

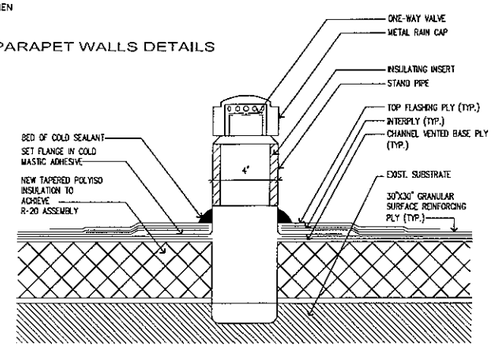

V.T.R. DETAIL
NTS

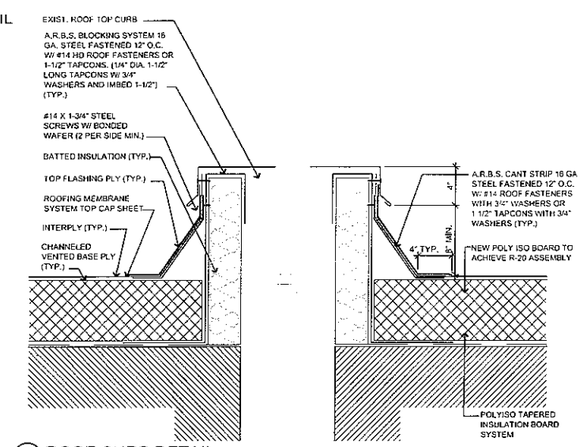

ROOF CURB DETAIL
NTS

City of Hialeah
Construction and Maintenance
900 East 56th Street Bldg. I
HIALEAH, FLORIDA 33013
tel: (305) 687-2682
fax: (305) 687-2642

City Architect
REINALDO A GOMEZ
LIC. AR0013736

PROJECT No.
1304

FIRE STATION No. 3 RE-ROOFING

800 WEST 49 th. AVE
HIALEAH, FL

CONSULTANTS

SEAL

No.	DATE	REVISION

DATE: 01-31-13
SCALE: AS SHOWN
DRAWN BY: N.BARRIONUEVO
CHECKED BY: R.G.

This drawing is property of the City of Hialeah and is not to be reproduced or copied in whole or part. It is not to be used on any other project and is to be returned upon request.

SHEET TITLE
ROOF FLOOR PLAN

SHEET NUMBER
AA-2.1