City of Hialeah – Building Department
501 Palm Avenue
Hialeah, Florida 33010

APPROVED LADDERS AT JOB SITE

Notice to all Contractors and/or Home Owners: As a precautionary measure, the City of Hialeah Building Department shall enforce the use of proper OSHA approved ladders at all job sites for all inspections with NO EXCEPTIONS. A fine of **$120.00** will be issued to any Contractor and/or Home Owner for any non-compliant ladder at time of inspection. Please follow OSHA Safety and Health Regulations for Construction Standards 1926.1053.

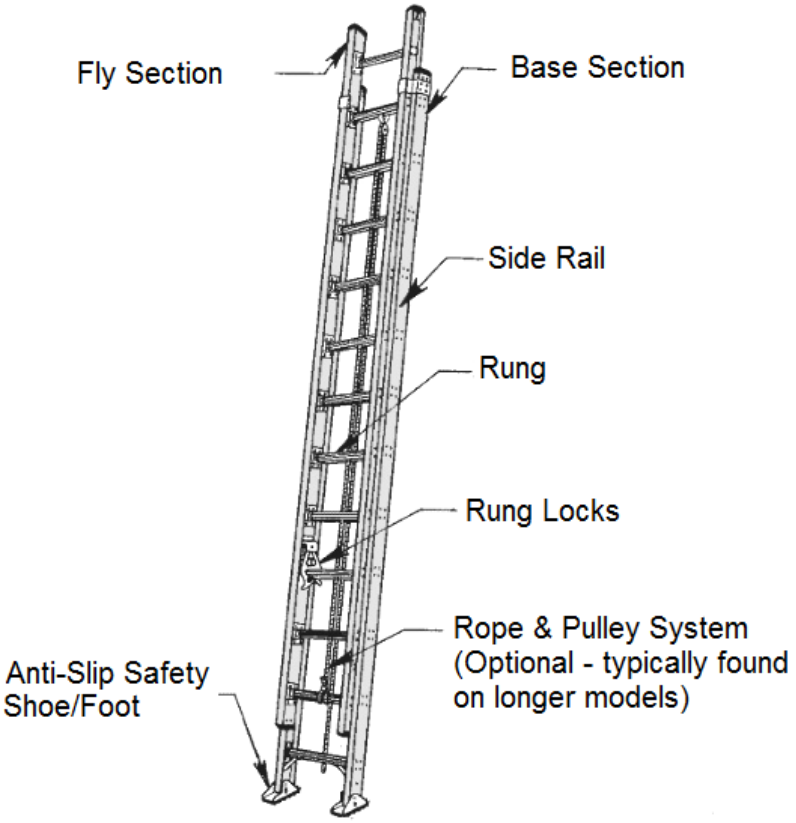

Extension Ladder

- Use a ladder that can sustain at least four times the maximum intended load. Follow the manufacturer's instructions and labels on the ladder. To determine the correct ladder, consider your weight plus the weight of your load. Do not exceed the load rating and always include the weight of all tools, materials and equipment.
- Ladders should be visually inspected before use for any defects such as: missing rungs, bolts, cleats, screws and loose components. Where a ladder has these or other defects, it must be immediately marked as defective or tagged with "Do Not Use" or similar language.
- Allow sufficient room to step off the ladder safely. Keep the area around the bottom and the top of the ladder clear of equipment, materials and tools.
- Set the ladder at the proper angle. When a ladder is leaned against a wall, the bottom of the ladder should be one-quarter of the ladder's working length away from the wall. For access to an elevated work surface, extend the top of the ladder three feet above that surface.
- Set the base of the ladder so that the bottom sits securely and so both side rails are evenly supported. The ladder rails should be square to the structure against which it is leaning with both footpads placed securely on a stable and level surface.
- When using a ladder in a high-activity area, secure it to prevent movement and use a barrier to redirect workers and equipment. If a ladder is placed in front of a door, always block off door.

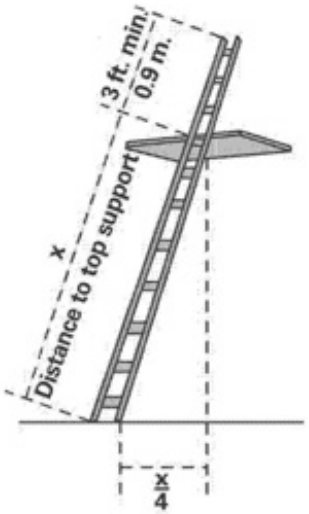

Figure A

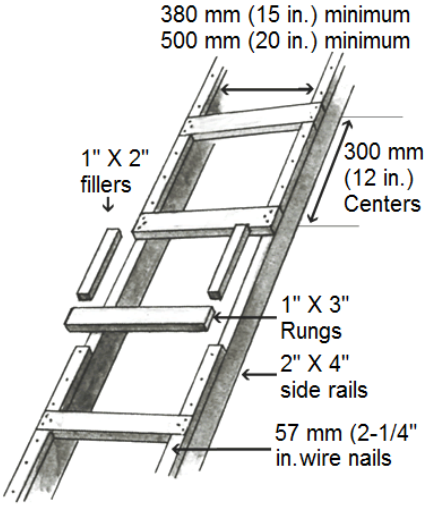

Figure B

PROVIDE the Right Extension Ladder for the Job with the Proper Load Capacity.

Select a ladder based on the expected load capacity (duty rating), the type of work to be done and the correct height. There are four categories of ladder duty ratings.

Type	Duty Rating	Use	Load
IAA	Speciaty Duty	Rugged	375 lbs.
IA	Extra Duty	Industrial	300 lbs.
I	Heavy Duty	Industrial	250lbs.
II	Speciaty Duty	Commercial	225 lbs.

Figure A: Proper Extension Ladder placement.

Figure B: Approved wood frame ladder.

For questions, concerns or clarifications on above referenced document, please contact our Office at 305-883-5825, Monday thru Friday 8:00 am to 9:30 am.

SECTION 1525
HIGH-VELOCITY HURRICANE ZONES UNIFORM PERMIT APPLICATION

Florida Building Code 5th Edition (2014)
High-Velocity Hurricane Zone Uniform Permit Application Form

INSTRUCTION PAGE

COMPLETE THE NECESSARY SECTIONS OF THE UNIFORM ROOFING PERMIT APPLICATION FORM AND ATTACH THE REQUIRED DOCUMENTS AS NOTED BELOW:

Roof System	Required Sections of the Permit Application Form	Attachments Required See List Below
Low Slope Application	A,B,C	1,2,3,4,5,6,7
Prescriptive BUR-RAS 150	A,B,C	4,5,6,7
Asphaltic Shingles	A,B,D	1,2,4,5,6,7
Concrete or Clay Tile	A,B,D,E	1,2,3,4,5,6,7
Metal Roofs	A,B,D	1,2,3,4,5,6,7
Wood Shingles and Shakes	A,B,D	1,2,4,5,6,7
Other	As Applicable	1,2,3,4,5,6,7

ATTACHMENTS REQUIRED:

1.	Fire Directory Listing Page
2.	From Product Approval: Front Page Specific System Description Specific System Limitations General Limitations Applicable Detail Drawings
3.	Design Calculations per Chapter 16, or if applicable, RAS 127 or RAS 128
4.	Other Component of Product Approval
5.	Municipal Permit Application
6.	Owners Notification for Roofing Considerations (Reroofing Only)
7.	Any Required Roof Testing/Calculation Documentation

Florida Building Code 5th Edition (2014)

High-Velocity Hurricane Zone Uniform Permit Application Form.

Section A (General Information)

Master Permit No._____ Process No. _____

Contractor's Name_____

Job Address_____

ROOF CATEGORY

- ☐ Low Slope
- ☐ Mechanically Fastened Tile
- ☐ Mortar/Adhesive Set Tiles
- ☐ Asphaltic Shingles
- ☐ Metal Panel/Shingles
- ☐ Wood Shingles/Shakes
- ☐ Prescriptive BUR-RAS 150

ROOF TYPE

☐ New roof ☐ Repair ☐ Maintenance ☐ Reroofing ☐ Recovering

ROOF SYSTEM INFORMATION

Low Slope Roof Area (SF)_____ Steep Sloped Roof AREA (SSF)_____ Total (SF)_____

Section B (Roof Plan)

Sketch Roof Plan: Illustrate all levels and sections, roof drains, scuppers, overflow scuppers and overflow drains. Include dimensions of sections and levels, clearly identify dimensions of elevated pressure zones and location of parapets.

Perimeter _____ Corners _____ x _____

***Florida Building Code* 5th Edition (2014)**
High-Velocity Hurricane Zone Uniform Permit Application Form.

Section C (Low Slope Application)

Fill in specific roof assembly components and identify manufacturer
(If a component is not used, identify as "NA")

System Manufacturer:_____

Product Approval No.:_____

Design Wind Pressures, From RAS 128 or Calculations:

P1:_____ P2:_____ P3:_____

Max. Design Pressure, from the specific product approval system:_____

Deck:

Type:_____

Gauge/Thickness:_____

Slope:_____

Anchor/Base Sheet & No. of Ply(s): _____

Anchor/Base Sheet Fastener/Bonding Material:
_____

Insulation Base Layer: _____

Base Insulation Size and Thickness: _____

Base Insulation Fastener/Bonding Material:
_____

Top Insulation Layer: _____

Top Insulation Size and Thickness: _____

Top Insulation Fastener/Bonding Material:
_____

Base Sheet(s) & No. of Ply(s): _____

Base Sheet Fastener/Bonding Material:
_____

Ply Sheet(s) & No. of Ply(s): _____

Ply Sheet Fastener/Bonding Material:
_____

Top Ply: _____

Top Ply Fastener/Bonding Material:
_____

Surfacing: _____

Fastener Spacing for Anchor/Base Sheet Attachment:

Field: ____" oc @ Lap, # Rows ____ @ ____" oc

Perimeter: ____" oc @ Lap, # Rows ___ @ ____" oc

Corner: ____" oc @ Lap, # Rows ____ @ ____" oc

Number of Fasteners Per Insulation Board:

Field _____ Perimeter _____ Corner _____

Illustrate Components Noted and Details as Applicable:
Woodblocking, Gutter, Edge Termination, Stripping, Flashing, Continuous Cleat, Cant Strip, Base Flashing, Counterflashing, Coping, Etc.

Indicate: Mean Roof Height, Parapet Height, Height of Base Flashing, Component Material, Material Thickness, Fastener Type, Fastener Spacing or Submit Manufacturers Details that Comply with RAS 111 and Chapter 16.

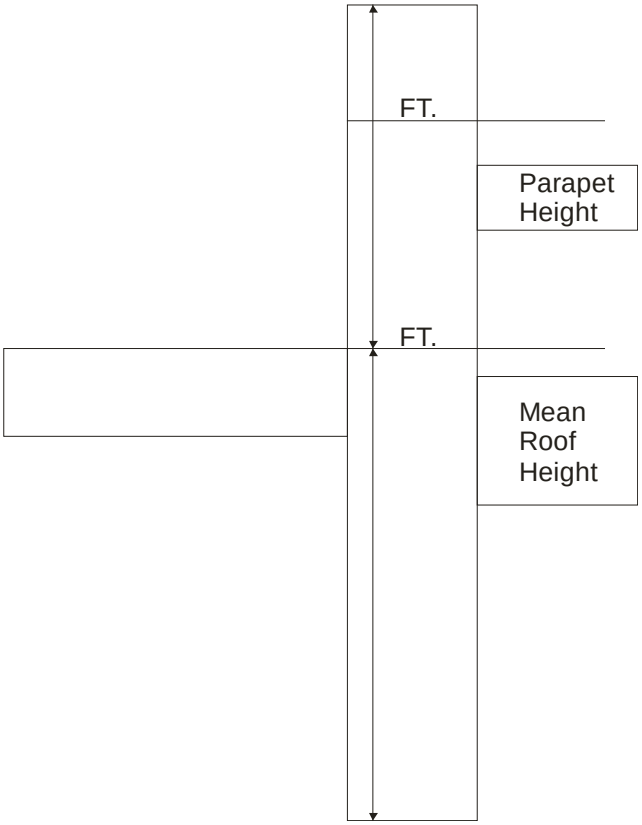

***Florida Building Code* 5th Edition (2014)**

High-Velocity Hurricane Zone Uniform Permit Application Form

Section D (Steep Sloped Roof System)

:

Roof System Manufacturer: _____

Notice of Acceptance Number: _____

Minimum Design Wind Pressures, If Applicable (From RAS 127 or Calculations):

P1: _____ P1: _____ P1: _____

Roof Slope: _____: 12

Ridge Ventilation? _____

Mean Roof Height: _____

Deck Type:

Type Underlayment:

Insulation:

Fire Barrier:

Fastener Type & Spacing:

Adhesive Type:

Type Cap Sheet:

Roof Covering:

Type & Size Drip Edge:

Florida Building Code 5th Edition (2014)

High-Velocity Hurricane Zone Uniform Permit Application Form.

Section E (Tile Calculations)

For Moment based tile systems, choose either Method 1 or 2. Compare the values for M_r with the values from M_f. If the M_f values are greater than or equal to the M_r values, for each area of the roof, then the tile attachment method is acceptable.

Method 1 "Moment Based Tile Calculations Per RAS 127"

(P1:____ x λ ____ = ____) – Mg: ____ = M_{r1} ____ Product Approval M_f _____

(P2:____ xλ ____ = ____) – Mg: ____ = M_{r2} ____ Product Approval M_f _____

(P3:____ xλ ____ = ____) – Mg: ____ = M_{r3} ____ Product Approval M_f _____

Method 2 "Simplified Tile Calculations Per Table Below"

Required Moment of Resistance (M_r) From Table Below _____ Product Approval M_f _____

M_r required Moment Resistance*					
Mean Roof Height Roof Slope	15′	20′	25′	30′	40′
2:12	34.4	36.5	38.2	39.7	42.2
3:12	32.2	34.4	36.0	37.4	39.8
4:12	30.4	32.2	33.8	35.1	37.3
5:12	28.4	30.1	31.6	32.8	34.9
6:12	26.4	28.0	29.4	30.5	32.4
7:12	24.4	25.9	27.1	28.2	30.0

*Must be used in conjunction with a list of moment based tile systems endorsed by the Broward County Board of Rules and Appeals.

For Uplift based tile systems use Method 3. Compared the values for F' with the values for Fr. If the F' values are greater than or equal to the Fr values, for each area of the roof, then the tile attachment method is acceptable.

Method 3 "Uplift Based Tile Calculations Per RAS 127"

(P1:____ x L ____ = ____ x w: = ____) – W: ____ x cos Θ ____ = F_{r1} ____ Product Approval F' _____

(P2:____ x L ____ = ____ x w: = ____) – W: ____ x cos Θ ____ = F_{r2} ____ Product Approval F' _____

(P3:____ x L ____ = ____ x w: = ____) – W: ____ x cos Θ ____ = F_{r3} ____ Product Approval F' _____

Where to Obtain Information		
Description	**Symbol**	**Where to find**
Design Pressure	P1 or P2 or P3	RAS 127 Table 1 or by an engineering analysis prepared by PE based on ASCE 7
Mean Roof Height	H	Job Site
Roof Slope	Θ	Job Site
Aerodynamic Multiplier	λ	Product Approval
Restoring Moment due to Gravity	M_g	Product Approval
Attachment Resistance	M_f	Product Approval
Required Moment Resistance	M_g	Calculated
Minimum Attachment Resistance	F'	Product Approval
Required Uplift Resistance	F_r	Calculated
Average Tile Weight	W	Product Approval
Tile Dimensions	L = length W = width	Product Approval
All calculations must be submitted to the building official at the time of permit application.		

City of Hialeah

ROOFING PERMIT FEE-SHEET

High Velocity Hurricane Zone

Permit # _____ Job Address: _____ Contractor: _____

Please enter the square footage for the roofing work you are performing in the space provided next to the appropriate roof type for your job. Listed below each roof type are the minimum required inspections. If your roof type does not fit in the specific categories listed, please see a building processor or inspector. All roofing systems must be installed as per the Florida Building Code, Manufactures Specification, Product Control Approvals and Protocols. **Minimum roofing permit fee is $180.00.**

Under penalties of perjury, I declare that to the best of my knowledge, the facts stated in this document are true. I understand that perjury is a felony of the third degree.

_____ (L.S.)
Signature

Building Use: ☐ Single Family/Duplex (R3) ☐ Multi-Family (#Units _____)(R2) ☐ Commercial (Other)

Application for Roof Type

☐ **New Roof** ☐ **Re-Roof** ☐ **Repair** ☐ **Recovery** ☐ **Maintenance***

Repair required inspections: 1. In Progress
2. Final

CATEGORY 92- LOW SLOPE APPLICATIONS (Gravel, Smooth, Modified, Single Ply EPDM, SPRM)

Fee Code	Description	Fee Calculation	Unit	# of Units	Fee
RF01	Roofing (Groups R2 & R3)	0.15 per sq. ft. of roof coverage	Sq. Ft.	_____	_____
RF02 RF03	Roofing (Other Groups)	0.15 per sq. ft. for first 30,000 sq. ft. 0.10 per sq. ft. thereafter	Sq. Ft.	_____	_____

REQUIRED INSPECTIONS
1. Before anchor sheet is covered**
2. Final

**-Always check with inspector for additional inspections.

CATEGORY 93- TILE ROOF (Nail-on Application)

Fee Code	Description	Fee Calculation	Unit	# of Units	Fee
RF01A	Roofing (Groups R2 & R3)	0.20 per sq. ft. of roof coverage	Sq. Ft.	_____	_____
RF02A RF03A	Roofing (Other Groups)	0.20 per sq. ft. for first 30,000 sq. ft. 0.10 per sq. ft. thereafter	Sq. Ft.	_____	_____

REQUIRED INSPECTIONS
1. Tin Cap
2. In-progress
3. Tile Installation
4. Final

*- Maintenance is charged by minimum permit fee or per valuation according to Building Department fee schedule as determined by processor.

CATEGORY 94- TILE ROOF (Mortar/Adhesive Set Application)

Fee Code	Description	Fee Calculation	Unit	# of Units	Fee
RF01A	Roofing (Groups R2 & R3)	0.20 per sq. ft. of roof coverage	Sq. Ft.	_____	_____
RF02A RF03A	Roofing (Other Groups)	0.20 per sq. ft. for first 30,000 sq. ft. 0.10 per sq. ft. thereafter	Sq. Ft.	_____	_____

REQUIRED INSPECTIONS

1. Tin Cap
2. In-progress
3. Tile Installation
4. Final

CATEGORY 95-SHINGLES (Asphalt, Fiberglass, SBS)

Fee Code	Description	Fee Calculation	Unit	# of Units	Fee
RF01	Roofing (Groups R2 & R3)	0.15 per sq. ft. of roof coverage	Sq. Ft.	_____	_____
RF02 RF03	Roofing (Other Groups)	0.15 per sq. ft. for first 30,000 sq. ft. 0.10 per sq. ft. thereafter	Sq. Ft.	_____	_____

REQUIRED INSPECTIONS

1. Tin Cap
2. Shingle in Progress
3. Final

CATEGORY 96- METAL ROOF (Standing Seams, Panels, Tiles, Etc.)

Fee Code	Description	Fee Calculation	Unit	# of Units	Fee
RF01A	Roofing (Groups R2 & R3)	0.20 per sq. ft. of roof coverage	Sq. Ft.	_____	_____
RF02A RF03A	Roofing (Other Groups)	0.20 per sq. ft. for first 30,000 sq. ft. 0.10 per sq. ft. thereafter	Sq. Ft.	_____	_____

Total Fee: $ _____

REQUIRED INSPECTIONS

1. Tin Cap
2. Fire Barrier
3. In Progress
4. Final

WARNING

A) Chapter 455 of the Florida Statutes provides for fines in the amount of $500.00 to $5000.00 for any consumer (owner-builder, contractor, etc.), who "aids and abets the unlicensed practice of a professional by employing such unlicensed person."

B) A Product Control "Notice of Acceptance" and method of installation must be provided at time of permit application and posted at job site for inspection on all roofing system.

C) The Contractor or owner-builder must provide an O.S.H.A. APPROVED ladder for roof access at the time of inspection. Failure to do so will result in reinspection fee.

City of Hialeah
Building Department

OWNERS AFFIDAVIT OF EXEMPTION

ROOF-TO-WALL CONNECTION HURRICANE MITIGATION RETROFIT FOR EXISTING SITE-BUILT SINGLE FAMILY RESIDENTIAL STRUCTURES PURSUANT TO SECTION 553.844 F.S.

To: City of Hialeah
Building Official
501 Palm Avenue
Hialeah, Florida

Re: Owners Name
Property Address
Roofing Permit Number

Dear Building Official:

I, _____ certify that I am not required to retrofit the roof-to-wall connections of my building because:

☐ The just valuation for the structure for purposes of ad valorem taxation is less than $300,00.00

☐ The building was constructed in compliance with the provisions of the Florida Building Code (FBC) or with the provisions of the 1994 edition of the South Florida Building Code (1994 SFBC)

_____ _____
Signature of Property Owner Print Name

State of Florida County of Miami-Dade
Sworn to and subscribed before me this _____ day of _____.

☐ Personally Known ☐ Produced Identification _____

Notary Signature _____ Seal

When the just valuation of the structure of ad valorem taxation is equal to or more than $300,00.00, and the building was not constructed in compliance with the FBC nor with 1994 SFBC, an affidavit of Roof-to-Wall Connection Mitigation Retrofit must be provided.

City of Hialeah
Building Department

AFFIDAVIT OF COMPLIANCE
ROOF-TO-WALL CONNECTION

HURRICANE MITIGATION RETROFIT FOR EXISTING SITE-BUILT SINGLE FAMILY RESIDENTIAL STRUCTURES PURSUANT TO SECTION 553.844 F.S.

To: City of Hialeah
Building Official
501 Palm Avenue, 2nd Floor
Hialeah, Florida 33010

Re: Owners Name
Property Address
Roofing Permit Number

Dear Building Official:

I _____, certify that I have improved the roof-to-wall connections of the referenced property as required by the **"Manual of Hurricane Mitigation Retrofits for Existing Site-Built Single Family Residential Structures"** as adopted by the Florida Building Commission by Rule 9B-3.047 F.A.C

_____ _____
Signature of Qualifying Agent Print Name

State of Florida County of Miami-Dade
Sworn to and subscribed before me this _____ day of _____.

☐ Personally Known ☐ Produced Identification _____

Notary Signature _____ Seal

Section 1524

High Velocity Hurricane Zones-Required Owners Notification for Roofing Considerations

1524.1 Scope. As it pertains to this section, it is the responsibility of the roofing contractor to provide the owner with the required roofing permit, and to explain to the owner the content of this section. The provisions of Chapter 15 of the ***Florida Building Code, Building*** govern the minimum requirements and standards of the industry for roofing system installations. Additionally, the following items should be addressed as part of the agreement between the owner and the contractor. The owner's initial in the designated space indicates that the item has been explained.

☐ 1. **Aesthetics-workmanship:** The workmanship provisions of Chapter 15 (High Velocity Hurricane Zone) are for the purpose of providing that the roofing system meets the wind resistance and water intrusion performance standards. Aesthetics (appearance) are not a consideration with respect to workmanship provisions. Aesthetic issues such as color or architectural appearance, that are not part of a zoning code, should be addressed as part of the agreement between the owner and the contractor.

☐ 2. **Renailing wood decks:** When replacing roofing, the existing wood roof deck may have to be renailed in accordance with the current provisions of Chapter 16 (High Velocity Hurricane Zones) of the Florida Building Code. (The roof deck is usually concealed prior to removing the existing roof system).

☐ 3. **Common roofs:** Common roofs are those which have no visible delineation between neighboring units (i.e. townhouses, condominiums, etc.). In buildings with common roofs, the roofing contractor and/or owner should notify the occupants of adjacent units of roofing work to be performed.

☐ 4. **Exposed ceilings:** Exposed, open beam ceilings are where the underside of the roof decking can be viewed from below. The owner may wish to maintain the architectural appearance; therefore, roofing nail penetrations of the underside of the decking may not be acceptable. The owner provides the option of maintaining this appearance.

☐ 5. **Ponding water:** The current roof system and/or deck of the building may not drain well and may cause water to pond (accumulate) in low-lying areas of the roof. Ponding can be an indication of structural distress and may require the review of a professional structural engineer. Ponding may shorten the life expectancy and performance of the new roofing system. Ponding conditions may not be evident until the original roofing system is removed. Ponding conditions should be corrected.

☐ 6. **Overflow scuppers (wall outlets):** It is required that rainwater flow off so that the roof is not overloaded from a buildup of water. Perimeter/edge walls or other roof extensions may block this discharge if overflow scuppers (wall outlets) are not provided. It may be necessary to install overflow scuppers in accordance with the requirements of: Chapter 15 and 16 herein and the ***Florida Building Code, Plumbing.***

☐ 7. **Ventilation:** Most roof structures should have some ability to vent natural airflow through the interior of the structural assembly (the building itself). The existing amount of attic ventilation shall not be reduced. **Exemption:** Attic spaces, designed by a Florida-licensed engineer or registered architect to eliminate the attic venting, venting shall not be required.

Property Address: _____ Permit No.: _____

Owner's/Agent's Signature: _____ Date: _____

Contractor's Signature: _____ Date: _____

City of Hialeah
Building Department

SHEATHING AFFIDAVIT

Certificate of Compliance

Job Address: _____ **Permit No.:** _____

Name of Roofing Company: _____

Name of Qualifier: _____ **License No.:** _____

Address: _____

I, _____, do hereby affirm:
(Print Name of Qualifier)

That I have personally inspected the re-nailing of the existing roof sheathing as required by the Florida Building Code 2010 (FBC) Section 2322.2.8 for the area covered by the roofing permit referenced above and further state that the re-nailing of the sheathing meets the requirements of the current edition of the Florida Building Code Section 2322.2.

FBC Section 2322.2.2, board roof sheathing shall have a net thickness of not less than 3/4 inch when the span is not more than 28 inches or 5/8 inch when the span is not more than 24 inches, shall have staggered joints and shall be nailed with 8d common nails not less than two in each 6 inch board nor three in each 8 inch board at each support.

FBC Section 2322.2.8, When existing roofs are re-roofed to the point that the existing roofing is removed down to the sheathing, the existing roof sheathing shall be re-nailed with 8d common nails (0.131 diameter by 2 ½" long with a 0.281 diameter full round head). Power driven 8d nails shall be of the same dimensions. Nail spacing shall be six inches on center at panel edges, six inches on center at intermediate supports and where applicable 4 inches on center over gable ends and sub-fascia. Existing fasteners may be used to achieve such minimum spacing.

_____ _____
Qualifier's Signature Date

_____, having first been duly sworn, does affirm the above statement
(Print Name of Qualifier) to be true and correct by his own personal knowledge.

_____ _____
Notary Signature (Seal/Stamp) Date

___ Personally known to me ___ Produced photo ID Type of ID _____

City of Hialeah
Building Department

ROOFING AFFIDAVIT
Certificate of Compliance

Job Address: _____ **Permit No.:** _____

Name of Roofing Company: _____

Name of Qualifier: _____ **License No.:** _____

Address: _____

I hereby certify to the City of Hialeah, Building Department that all portions of the above described roof improvements, covered and unseen by the Roofing Inspector during "in-progress" inspections, was constructed and/or installed in accordance with approved plans, specifications and Product Control Approval as per Florida Building Code.

_____ _____
Qualifier's Signature Date:

_____, having first been duly sworn, does affirm the above statement
(Print Name of Qualifier) to be true and correct by his own personal knowledge.

_____ _____
Notary Signature (Seal/Stamp) Date

___ Personally known to me ___ Produced photo ID Type of ID _____

INSTRUCTIONS FOR COMPLETING AND RECORDING A NOTICE OF COMMENCEMENT

Completion of Form:

- All information must be typewritten or legibly printed.
- All applicable line numbers must be completed. Items 1, 2, and 3 are always to be filled in. Items 4 through 9 are to be completed as applicable. For lengthy descriptions, attach a separate page and indicate on the form that the legal description is attached. Should line 5 apply, a photocopy of the Payment Bond must be attached to the instrument when recorded.
- The property owner or owner's authorized agent must sign in the presence of a Notary Public, who must then complete the acknowledgement portion of the form and affix notary public's seal. The Miami-Dade County Recorder's Office does not have notaries that may provide this service. This portion needs to be completed before hand.

Recording Information:

- Prepare a self-addressed, stamped envelope with the name and address of whom the recorded notice is to be returned.
- Count the total number of pages in the document. Fees are $10.00 for the first page and $8.50 for subsequent pages.
- Your document takes about four to six weeks to process and return, should you need it any sooner you may walk it in and take a certified copy that same day.
- Payments are accepted in the form of Cash, Certified or Cashier's Check, or Money Order made payable to the Clerk of Courts. MasterCard and Visa are accepted subject to a $15.00 minimum.

- Walk in Address: Miami-Dade County Recorder Office
  22 NW 1 Street
  Miami, Florida 33128

- Hours of Operation: 9:00 a.m. – 4:00 p.m.

- Telephone: (305) 275-1155
  Press 1 for English, 2 for Spanish, then;
  Press 6 for Recorder Office, then;
  Press 1 for Documents, then;
  Press 0 for Operator

- Mailing Address: Miami-Dade County Recorder Office
  P.O. Box 011711
  Flagler Station
  Miami, Florida 33101

NOTICE OF COMMENCEMENT

A RECORDED COPY MUST BE POSTED ON THE JOB SITE AT TIME OF FIRST INSPECTION

PERMIT NO. _____ TAX FOLIO NO. _____

STATE OF FLORIDA
COUNTY OF MIAMI-DADE

THE UNDERSIGNED hereby gives notice that improvement will be made to certain real property, and in accordance with Chapter 713, Florida Statutes, the following information is provided in this Notice of Commencement.

1. Legal description of property and street address:_____

2. General description of improvement:_____

3. Owner(s) name and address:_____

Interest in property:_____
Name and address of fee simple titleholder (if other than owner):_____

4. Contractor's name, address, and phone number:_____

5. Surety: (Payment bond required by owner from contractor, if any)
Name and address:_____
Amount of bond: $_____
6. Lender's name, address, and phone number:_____

7. Persons within the State of Florida designated by Owner upon whom notices or other documents may be served as provided by Section 713.13(1)(a)7., Florida Statutes:
Name, address, and phone number:_____

8. In addition to himself or herself, Owner designates the following person(s) to receive a copy of the Lienor's Notice as provided in Section 713.13(1)(b), Florida Statutes:
Name, address, and phone number:_____

9. Expiration date of the Notice of Commencement (the expiration date is 1 year from the date of recording unless a different date is specified):_____

WARNING TO OWNER: ANY PAYMENTS MADE BY THE OWNER AFTER THE EXPIRATION OF THE NOTICE OF COMMENCEMENT ARE CONSIDERED IMPROPER PAYMENTS UNDER CHAPTER 713, PART 1, SECTION 713.13, FLORIDA STATUTES, AND CAN RESULT IN YOUR PAYING TWICE FOR IMPROVEMENTS TO YOUR PROPERTY. A NOTICE OF COMMENCEMENT MUST BE RECORDED AND POSTED ON THE JOB SITE BEFORE THE FIRST INSPECTION. IF YOU INTEND TO OBTAIN FINANCING, CONSULT WITH YOUR LENDER OR AN ATTORNEY BEFORE COMMENCING WORK OR RECORDING YOUR NOTICE OF COMMENCEMENT.

_____ _____
Signature of Owner or Owner's Authorized Officer/Director/Partner/Manager Signatory's Title/Office

_____
Print Name

The foregoing instrument was acknowledged before me this _____ day of _____, 20____, by _____ _____ as _____ (type of authority, e.g. officer, trustee, attorney in fact) for _____ (name of party on behalf of whom instrument was executed).

Personally Known ☐ OR Produced Identification ☐ Type of Identification Produced: _____

_____
Signature of Notary Public – State of Florida

Print, Type, or Stamp
Commissioned Name
of Notary Public: _____

VERIFICATION PURSUANT TO SECTION 92.525, FLORIDA STATUTES.
Under penalties of perjury, I declare that I have read the foregoing and that the facts stated in it are true to the best of my knowledge and belief.

_____
Signature of Natural Person Signing Above

Turn Over for Instructions

MIAMI-DADE COUNTY

BOARD OF RULES AND APPEALS

SIMPLIFIED ENERGY SYNOPSIS FORM

FOR THE GLAZING AND ROOFING PERMITS*

**This form shall be filled out and validated by the Plans Examiner reviewing energy; the form must then be made available to the Structural Plans Examiner and the Roofing Plans Examiner. This form must be included as part of the both the glazing permit package and the roofing permit package. The Building and Roofing Inspector shall utilize this form to confirm energy code compliance.*

Project or Owners Name:	
Project Address:	
Process Number:	

Building Element**	U-Factor	R-Value	SHGC	Reflectance
Glazed Fenestration				
Skylight				
Above Deck Roof Insulation				
Roof Reflectance				

**** Mark NA for any information which is not applicable**